VIA Embedded

user manual

ART-5450

Compact Fanless Embedded System with VIA Nano™ E CPU for Vehicle/ Fleet Management

-103-06202013-4535

Copyright

Copyright © 2013 VIA Technologies Incorporated. All rights reserved.

No part of this document may be reproduced, transmitted, transcribed, stored in a retrieval system, or translated into any language, in any form or by any means, electronic, mechanical, magnetic, optical, chemical, manual or otherwise without the prior written permission of VIA Technologies, Incorporated.

Trademarks

All trademarks are the property of their respective holders.

Disclaimer

No license is granted, implied or otherwise, under any patent or patent rights of VIA Technologies. VIA Technologies makes no warranties, implied or otherwise, in regard to this document and to the products described in this document. The information provided in this document is believed to be accurate and reliable as of the publication date of this document. However, VIA Technologies assumes no responsibility for the use or misuse of the information (including use or connection of extra device/equipment/add-on card) in this document and for any patent infringements that may arise from the use of this document. The information and product specifications within this document are subject to change at any time, without notice and without obligation to notify any person of such change.

VIA Technologies, Inc. reserves the right the make changes to the products described in this manual at any time without prior notice.

Regulatory Compliance

FCC-A Radio Frequency Interference Statement

This equipment has been tested and found to comply with the limits for a class A digital device, pursuant to part 15 of the FCC rules. These limits are designed to provide reasonable protection against harmful interference when the equipment is operated in a commercial environment. This equipment generates, uses, and can radiate radio frequency energy and, if not installed and used in accordance with the instruction manual, may cause harmful interference to radio communications. Operation of this equipment in a residential area is likely to cause harmful interference, in which case the user will be required to correct the interference at his personal expense.

Notice 1

The changes or modifications not expressly approved by the party responsible for compliance could void the user's authority to operate the equipment.

Notice 2

Shielded interface cables and A.C. power cord, if any, must be used in order to comply with the emission limits.

Notice 3

The product described in this document is designed for general use, VIA Technologies assumes no responsibility for the conflicts or damages arising from incompatibility of the product. Check compatibility issue with your local sales representatives before placing an order.

CE

FC Tested To Comply
With FCC Standards
FOR HOME OR OFFICE USE

Battery Recycling and Disposal

- ☐ Only use the appropriate battery specified for this product.
- ☐ Do not re-use, recharge, or reheat an old battery.
- ☐ Do not attempt to force open the battery.
- ☐ Do not discard used batteries with regular trash.
- ☐ Discard used batteries according to local regulations.

Safety Precautions

- ☐ Always read the safety instructions carefully.
- ☐ Keep this User's Manual for future reference.
- ☐ All cautions and warnings on the equipment should be noted.
- ☐ Keep this equipment away from humidity.
- ☐ Lay this equipment on a reliable flat surface before setting it up.
- ☐ Make sure the voltage of the power source and adjust properly 110/220V before connecting the equipment to the power inlet.
- ☐ Place the power cord in such a way that people cannot step on it.
- ☐ Always unplug the power cord before inserting any add-on card or module.
- ☐ If any of the following situations arises, get the equipment checked by authorized service personnel:
  - The power cord or plug is damaged.
  - Liquid has penetrated into the equipment.
  - The equipment has been exposed to moisture.
  - The equipment has not worked well or you cannot get it work according to User's Manual.
  - The equipment has dropped and damaged.
  - The equipment has obvious sign of breakage.
- ☐ Do not leave this equipment in an environment unconditioned or in a storage temperature above 60°C (140°F). The equipment may be damaged.
- ☐ Do not leave this equipment in direct sunlight.
- ☐ Never pour any liquid into the opening. Liquid can cause damage or electrical shock.
- ☐ Do not place anything over the power cord.
- ☐ Do not cover the ventilation holes. The openings on the enclosure protect the equipment from overheating

Ordering Information

Part Number	Description
ART-5450-1N10A1	Fanless Embedded System with 1.0 GHz Nano™-E CPU, 1 x VGA, 2 x LVDS, 2 x RS-232/422/485 , 2 x RS-232, 4 x USB, 2 x GigaLAN, and DC-in 7~36V
ART-5450-2N10A1	Fanless Embedded System with 1.0 GHz Nano™-E CPU, 1 x VGA, 2 x LVDS, 2 x RS-232/422/485 , 2 x RS-232, 4 x USB, 2 x GigaLAN, DC-in 7~36V, and PWM-1000
ART-5450-3N10A1	Fanless Embedded System with 1.0 GHz Nano™-E CPU, 1 x VGA, 2 x LVDS, 2 x RS-232/422/485 , 2 x RS-232, 4 x USB, 2 x GigaLAN, DC-in 7~36V, PWM-1000, WLAN (US) and GPS
ART-5450-4N10A1	Fanless Embedded System with 1.0 GHz Nano™-E CPU, 1 x VGA, 2 x LVDS, 2 x RS-232/422/485 , 2 x RS-232, 4 x USB, 2 x GigaLAN, DC-in 7~36V, PWM-1000, WLAN (EU) and GPS

Packing Lists

ART-5450-1N10A1

- ☐ 1 x ART-5450 unit
- ☐ 1 x Wall mount bracket
- ☐ 1 x Power cable , 2-Pole Phoenix plug to DC-jack
- ☐ 1 x Screw pack

ART-5450-2N10A1

- ☐ 1 x ART-5450 unit
- ☐ 1 x Wall mount bracket
- ☐ 1 x Power cable , 2-Pole Phoenix plug to DC-jack
- ☐ 1 x Screw pack
- ☐ PWM-1000-00A1 power adapter module

ART-5450-3N10A1

- ☐ 1 x ART-5450 unit
- ☐ 1 x Wall mount bracket
- ☐ 1 x Power cable , 2-Pole Phoenix plug to DC-jack
- ☐ 1 x Screw pack
- ☐ EMIO-1532-00A1 GPS module
- ☐ EMIO-1530-A0A1 WLAN (US) module
- ☐ PWM-1000-00A1 power adapter module

ART-5450-4N10A1

- ☐ 1 x ART-5450 unit
- ☐ 1 x Wall mount bracket
- ☐ 1 x Power cable , 2-Pole Phoenix plug to DC-jack
- ☐ 1 x Screw pack
- ☐ 1x EMIO-1532-00A1 GPS module
- ☐ 1x EMIO-1530-A1A1 WLAN (EU) module
- ☐ PWM-1000-00A1 power adapter module

Optional Accessories

Peripherals

Model Number	Description
EMIO-1530-A0A1	802.11b/g Wireless LAN USB module (US)
EMIO-1530-A1A1	802.11b/g Wireless LAN USB module (EU)
EMIO-1532-00A1	RS-232 interface, SiRFStarIII base, 20-ch GPS receiver
EMIO-1534-00A1	Full Mini-PCIe card, Ericsson Mobile Broadband Module F3307, supports HSPA/WCDMA (UMTS 1900/850 MHz)/EDGE/GPRS (GSM 850/900/1800/1900 MHz)
EMIO-1534-01A1	Full Mini-PCIe card, Ericsson Mobile Broadband Module F3307, supports HSPA/WCDMA (UMTS 2100/900 MHz)/EDGE/GPRS (GSM 850/900/1800/1900 MHz)
EMIO-1538-00A1	Half Mini-PCIe card, Motorola Mobile Broadband Module HTM1000, Supports HSPA/WCDMA (2100/1900/850 MHz)/EDGE/GPRS (1900/1800/900/850 MHz)
PWM-1000-00A1	In-vehicle power management adapter supports schedule and maintenance for power ignition on/off delay time, DC input 10V to 30V

External AC-to-DC Adapter and Power Cable

Model Number	Description
99G63-020246	AC-to-DC adapter, DC 19V/90W with 2-pole Phoenix Power Plug
99G33-02058C	Power Cord, 180 cm, USA type
99G33-02057C	Power Cord, 180 cm, Europe type

RAM module

Model Number	Description
99G06-010408	2GB DDR2 667MHz, 128Mx8 SDRAM SODIMM, Industrial Grade, 0°C ~ 85°C
99G06-010398	1GB DDR2 667MHz, 128Mx8 SDRAM SODIMM, Industrial Grade, 0°C ~ 85°C
99G06-010648	1GB DDR2 667MHz, 128Mx8 SDRAM SODIMM, Industrial Grade, -40°C to 85°C
99G06-010578	2GB DDR2 667MHz, 128Mx8 SDRAM SODIMM, Industrial Grade, -40°C to 85°C

Compact Flash Disk

Model Number	Description
99G61-060011	1GB Compact Flash Disk, Industrial Grade, -40°C to 85°C
99G61-060021	2GB Compact Flash Disk, Industrial Grade, -40°C to 85°C
99G61-060031	4GB Compact Flash Disk, Industrial Grade, -40°C to 85°C
99G61-060091	8GB Compact Flash Disk, Industrial Grade, -40°C to 85°C
99G61-060101	16GB Compact Flash Disk, Industrial Grade, -40°C to 85°C

TABLE OF CONTENTS

1 Product Overview 1
Key Features 3
Specifications 5
ART-5450 Dimensions 9
Accessories 10
Power cable 2-pole Phoenix 10
Mounting Brackets 10
2 ART-5450 Hardware Functionality 11
Layout of I/O Coastline 12
Front Panel Layout 12
Rear Panel Layout 12
Power Button 13
Power Input Port 13
Power Output Port 13
LED Indicators 14
USB Ports: USB Port 1 ~ Port 4 14
COM Ports 15
COM1 and COM2 Ports 15
COM3 and COM4 Ports 16
UART Port 16
GPIO Port 16
VGA Port 17
LVDS Ports: LVDS1 and LVDS2 18
Backlight and Brightness Controls 18
LCD Signal Power 3.3V/5V Switch 19
Audio Ports 20
Gigabit Ethernet Ports 1 and 2 21
3 Hardware Installation 22
How to remove the cover 23
How to install memory 24
How to install the WLAN module 25
How to install the GPS module 29
How to install the Mobile Broadband modules 33
How to install the Mobile Broadband modules 33
How to install the Mounting Brackets 36
How to install the PWM-1000 39

PWM-1000 Pinouts 41
4 Jumper Settings 43
Basic Jumper Configuration 44
CLEAR_CMOS: Clear CMOS jumper 45
AT/ATX power mode select 46
PVDD1_SEL: LCD power jumper 47
PVDD2_SEL: LCD power jumper 48
5 BIOS Setup 49
Entering the BIOS Setup Menu 50
Control Keys 50
Navigating the BIOS Menus 51
Getting Help 51
Main Menu 52
Standard CMOS Features 52
Advanced BIOS Features 52
Advanced Chipset Features 52
Integrated Peripherals 52
FreeDOS Configuration 52
Power Management Setup 52
PnP/PCI Configurations 53
PC Health Status 53
Frequency/Voltage Control 53
Load Optimized Defaults 53
Set Supervisor Password 53
Set User Password 53
Save & Exit Setup 53
Exit Without Saving 53
Standard CMOS Features 54
Date 54
Time 54
Video 54
Halt On 54
IDE Channels 55
Advanced BIOS Features 56
Virus Warning 56
CPU L1 & L2 Cache 56
CPU L2 Cache ECC Checking 56
Quick Power On Self-Test 57
First/Second/Third Boot Device 57
Boot Other Device 57
Boot Up NumLock Status 57
Typematic Rate Setting 57
Typematic Rate (Chars/Sec) 58
Typematic Delay (Msec) 58

Security Option....58
MPS Version Control for OS....58
OS Select for DRAM > 64 MB....58
HDD S.M.A.R.T Capability....58
Video BIOS Shadow....58
Full Screen Logo Show....58
Summary Screen Show....59
CPU Features....60
Thermal Management....60
Thermal Monitor Bus Ratio....60
Thermal Monitor Bus VID....60
Hard Disk Boot Priority....61
Advanced Chipset Features....62
Memory Hole....62
System BIOS Cacheable....62
Video RAM Cacheable....62
GFX & PCIE VGA Co-Exist....62
Internal VGA Control....63
VGA Share Memory Size....63
Direct Frame Buffer....63
Select Display Device....63
Panel Type....64
CPU & PCI Bus Control....65
PCI Master 0 WS Write....65
PCI Delay Transaction....65
VIA PWR Management....65
Integrated Peripherals....66
VIA OnChip IDE Device....67
CF Card ATA66....67
SATA Controller....67
IDE DMA Transfer Access....67
OnChip IDE Channel 1....67
IDE Prefetch Mode....67
Secondary Master PIO....67
Secondary Slave PIO....67
Secondary Master UDMA....68
Secondary Slave UDMA....68
IDE HDD Block Mode....68
VIA OnChip PCI Device....69
Azalia HDA Controller....69
OnBoard LAN Boot ROM....69
SuperIO Device....70
Watch Dog Timer Select....70
SuperIO COM Ports (UARTs)....71

Onboard Serial Port 1 71
COM1 RS232/422/485 Type 71
Onboard Serial Port 2 71
COM2 RS232/422/485 Type 71
Onboard Serial Port 3 and 4 71
Onboard Serial Port 5 and 6 71
USB Device Setting 72
USB 1.0 Controller 72
USB 2.0 Controller 72
USB Operation Mode 72
USB Keyboard Function 72
USB Mouse Function 72
USB Storage Function 73
FreeDOS Configuration 74
Boot into FreeDOS 74
Power Management Setup 75
ACPI Suspend Type 75
Power Management Option 75
HDD Power Down 75
Suspend Mode 76
Video Off Option 76
Video Off Method 76
MODEM Use IRQ 76
Soft-Off by PWRBTN 76
Run VGABIOS if S3 Resume 76
AC Loss Auto Restart 76
Wakeup Event Detect 77
PowerOn by PCI Card 77
RTC Alarm Resume 77
Date (of Month) 77
Resume Time (hh:mm:ss) 77
PnP/PCI Configurations 78
Init Display First 78
PNP OS Installed 78
Reset Configuration Data 78
Resources Controlled By 79
PCI/VGA Palette Snoop 79
Assign IRQ for VGA 79
Assign IRQ for USB 79
Maximum Payload Size 79
IRQ Resources 80
PC Health Status 81
Frequency/Voltage Control 82
DRAM Frequency 82

DDR CAS Latency Control 82
DDR Burst Length 82
DDR 1T Command Rate 82
DRDY Table 82
ODT 82
Spread Spectrum 83
Load Optimized Defaults 84
Set Supervisor/User Password 85
Save & Exit Setup 86
Exit Without Saving 87
6 Driver Installation 89
Microsoft Driver Support 90
Linux Driver Support 90

1

Product Overview

The ART-5450 is a fanless, compact and rugged embedded system designed specifically for in-vehicle fleet management applications. Its inclusion of various mobile and wireless protocols serves to provide the necessary connectivity for maintaining proper communications with a dispatch center.

The ART-5450 system is based on the Em-ITX mainboard form factor stacked with the EMIO-3450 module and powered by a VIA Nano E 1.0 GHz processor. The ART-5450 supports high computing power operation with low power consumption. And it is capable of handling a wide range DC power inputs from 7V to 36V in both AT and ATX modes.

The ART-5450 also uses a special design to handle the critical issue of in-vehicle power management (ignition on/off, delay on/off, schedule the maintenance power on / off time). The power management system protects the ART-5450 from power surges — guarding against damage from transient car power. With the power management system it is capable of handling a wide range DC power inputs from 10V to 30V.

The ART-5450 system supports dual-sided multiple I/O connectors such as audio ports, USB 2.0 ports, configurable COM ports, VGA port, LVDS ports, Gigabit Ethernet ports, CompactFlash slot, and SIM card slot.

The ART-5450 system offers an expansive array of connectivity options including a 20 channel GPS receiver and Wireless LAN. In addition, it supports a variety of common mobile network protocols such as 3.5G, 2G, WCDMA, EDGE, and GPRS.

The ART-5450's system chassis is a robust aluminum alloy and designed to support mounting to a floor bed or side-panel of a vehicle.

These combined features make the ART-5450 ideally suited for wireless, in-vehicle system and fleet management applications.

KEY FEATURES

Fanless, Compact and Rugged Chassis

The ART-5450 features fanless operation in a sealed aluminum chassis that does double duty as a thermal solution.

Video Intensive Triple Display with Dual Independent Display

The rich display interface of the ART-5450 includes VGA and two single-channel LVDS. Combined, these support three concurrent displays consisting of CRT, LVDS1 and LVDS2 with the same timing and same resolution.

USB ports, Serial (COM) Ports and Dual Gigabit LAN supports intensive Communication and Control

The ART-5450 supports four USB 2.0 ports, enabling access to USB peripherals such as storage subsystems, security ID devices, card readers, bar code scanners, multifunction printers and scanners individually dedicated or shared among users via the network, making the best of USB device investments.

The ART-5450 is equipped with Dual Gigabit Ethernet, and four serial ports, including two RS-232 serial ports and two RS-232/422/485 serial ports, that enable communication and control at field level for measurement and operator control of diverse automation.

Support for a Wide Range of Power Sources

The ART-5450 supports a wide range of input power from DC 7V~36V. The flexibility of power input enables the ART-5450 to be deployable for various automation environments.

In-Vehicle Power Management Adapter Options

The ART-5450 has an optional power management module (PWM-1000) that supports ignition on/off delay, maintenance scheduling, ignition / ACC status notification, and "Input Under Voltage Protection" notification. The VIA PWM-1000 in-vehicle

power management module can support a wide range of DC power Input voltages from DC 10V~30V.

Optimized Integration

Optimized integration enables a quick setup and simplifies maintenance. Systems are supplied ready to run with long lifecycle support.

SPECIFICATIONS

Processor Core Logic System

CPU
- Embedded VIA Nano E 1.0 GHz processor
  - 800 MHz front-side bus
  - 1 MB L2 cache
  - NanoBGA2 package: compact 21 mm x 21 mm

System Chipset
- VIA VX800 Unified Digital Media IGP chipset

BIOS
- Award BIOS
- SPI 8Mbit Flash memory

System Power Management
- ACPI 3.0 Supported

System Memory

Technology
- One 200-pin DDR2 533/667 SDRAM SODIMM socket

Maximum Capacity
- Supports memory sizes up to 2 GB

Graphic

Controller
- Integrated VIA Chrome™ 9 HC3 DX9 3D/2D graphics engine with MPEG-2 and WMV9 video decoding acceleration built into the VIA VX800 Unified Digital Media IGP chipset

Display Memory
- Optimized Unified Memory Architecture (UMA), supports up to 256 MB frame buffer using system memory

CRT Interface
- One VGA connector
- Pixel resolution support up to 1920 x 1200

LVDS Interface
- Supports two 24-bit single-channel LVDS interface connectors (LVDS1 and LVDS2)
- Up to 1280 x 1024 panel resolution (single-channel LVDS)
- Built-in Inverter controls signals of the DB-26 ports
- Built-in system internal 5V/3.3V LCD power switch (default at 3.3V)

Dual Independent Display
- Supports LVDS1 + LVDS2 at same resolutions, same pixel depths, and same refresh rates
- Supports CRT + LVDS1 or CRT + LVDS2 at different resolutions, pixel depths, and refresh rates

Gigabit Ethernet

Controller
- Two onboard VIA VT6130 Gigabit Ethernet controllers

Interface
- Supports two RJ45 ports
- Supports Wake-on-LAN (WOL)
- Supports Preboot Execution Environment (PXE)

Audio

Controller
- VIA VT1708B high definition audio codec

Interface
- Supports Line-in, Line-out, and Mic-in 3.5mm TRS jacks

USB 2.0

Built-in Four USB ports
- USB 2.0 compliant
- USB 1 and USB 2 located at front panel
- USB 3 and USB 4 located at rear panel

Serial Ports

Controller
- Fintek F81865 LPC I/O controller

Interface
- Supports four COM ports (configurable in BIOS setup)
  - Two RS-232/422/485 DB-9 ports (COM1 and COM2)
  - Two RS-232 DB-9 ports (COM3 and COM4)
- Supports RS-485 AutoFlow Control function

Storage

CompactFlash
- Supports CompactFlash Type I or Type II

System Indicator

Power Status LED
- One green color LED

HDD Activity LED
- One red color LED

Watchdog Timer

Output
- System reset

Interval
- Programmable 1~255 sec.

System external I/O ports

Front Panel I/O
- One HDD LED
- One power LED
- Two RS-232/422/485 COM ports (COM1 and COM2)
- Two RS-232 COM ports (COM3 and COM4)
- Two USB Type A ports (USB1 and USB2)
- Three 3.5mm TRS jacks (Line-in, Line-out and Mic-in)
- One 2-pole of Phoenix power input connector
- One ATX power On/Off button
- One antenna hole to support EMIO-1530 Wireless (802.11b/g) LAN antenna
- One antenna hole to support either EMIO-1534 or EMIO-1538 HSPA/WCDMA/EDGE/GPRS Mobile Broadband antenna

Rear Panel I/O
- One VGA port
- Two USB Type A ports (USB3 and USB4)
- Two DB-26 ports for dual 24-bit single-channel LVDS interface (LVDS1 and LVDS2)
- Two RJ45 ports for dual Gigabit Ethernet (LAN1 and LAN2)
- One antenna hole to support EMIO-1532 GPS antenna
- One CompactFlash slot

Power Supply

Power Consumption
- Typical 19.56 W
- Maximum 31.15 W

Input Voltage
- Accepts wide range of power input ($7V_{DC}$ ~ $36V_{DC}$)
- Supports AT and ATX modes
- with PWM-1000 accept wide range of power input (10VDC ~ 30VDC)

Power Input Connector
- One 2-pole Phoenix connector

AT/ATX Selection
- Built-in AT/ATX power mode jumper on internal system board (default at ATX)

Fuse Rating
- 7A / 125V

In-Vehicle Power Management Adapter (PWM-1000)
- Supports ignition on/off power delay
- Supports Input Over-Voltage Protection
- Supports Over-Current Protection
- Supports Input Under-Voltage Protection
- DC-in 10V ~ 30V @ 0A ~ 5A
- DC-out +12V ± 5% @ 3.33A
- 40W output power

Mechanical Characteristics

Construction
- Aluminum alloy

Mounting
- Supports table-mounting and wall-mounting

Dimension (W x H x D)
- 232.6 mm (W) x 60 mm (H) x 124.8 mm (D)

Weight
- 1.6 Kg (net weight)

Environment Specifications

Operating Temperature
- With CompactFlash disk only:
  - -20°C ~ 70 °C
- With EMIO-1532 and EMIO-1530 modules:
  - -20°C ~ 60 °C

Storage Temperature
- -20°C ~ 75°C @ 90% non-condensing humidity

Relative Humidity
- 0% ~ 90% @ 45°C, non-condensing

Vibration loading during operation
- With CompactFlash disk only:
  - 5Grms, IEC 60068-2-64, random, 5~500Hz, 1 Oct./min, 1hr/axis

Shock during operation
- With CompactFlash disk only:
  - 50G, IEC 60068-2-27, half sine, 11ms duration

EMC Approval
- CE, FCC Class A, CCC

Safety Approval
- CB, CCC

In-Vehicle Certificate
- e-mark

Software Compatibility

Operating System
- Microsoft Windows 7, Microsoft Windows Embedded Standard 2009
  - Supports FliteDeck SDK 2.0
  - Built-in FreeDOS OS inside of SPI flash BIOS
- Linux Debian 5.0.3 (Kernel 2.6.32)

ART-5450 DIMENSIONS

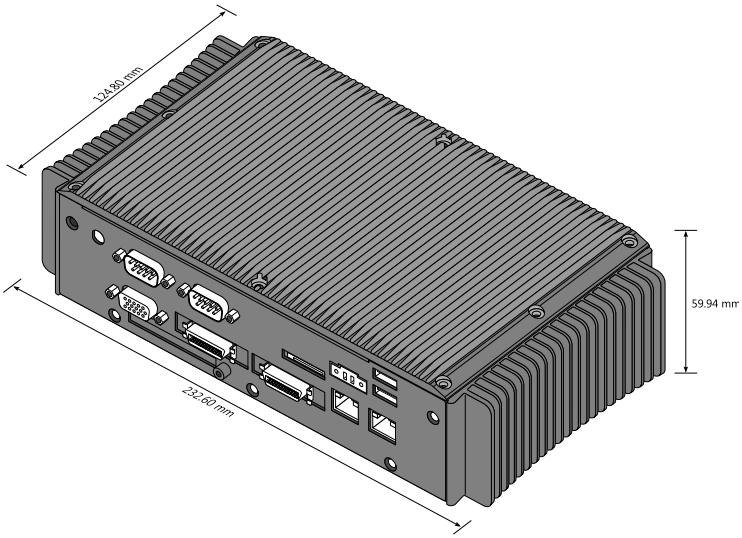

ACCESSORIES

Power cable 2-pole Phoenix

Part # 99G33-250073

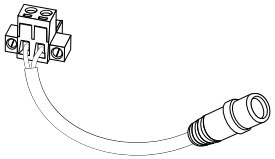

Mounting Brackets

Part # 99G42-092136-A1

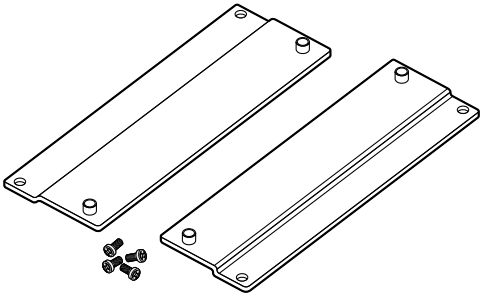

2

ART-5450 Hardware Functionality

This chapter provides information about the ART-5450's external I/O ports, LED indicators and their functionality.

LAYOUT OF I/O COASTLINE

Front Panel Layout

Front I/O

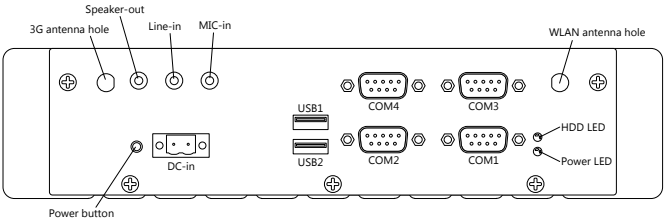

Rear Panel Layout

Rear I/O

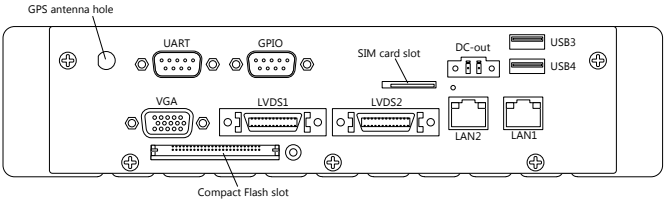

Power Button

The ART-5450 comes with a power button on the front panel that supports two functions: soft power on/off (instant off or delay 4 seconds), and suspend.

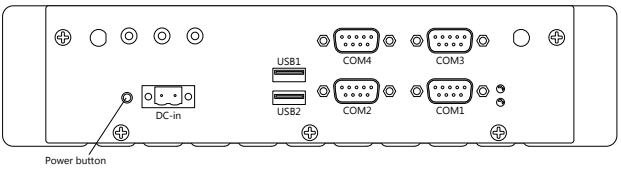

Power Input Port

The ART-5450 comes with a Phoenix connector on the front panel that carries $7V_{DC}$ ~ $36V_{DC}$ external power input.

Pin	Signal
1	GND
2	7VDC ~ 36VDC

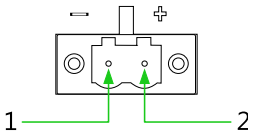

Power Output Port

The ART-5450 includes a 2-pole Phoenix connector on the rear panel that delivers 5 V_{DC} to an external device.

Pin	Signal
1	GND
2	5VDC

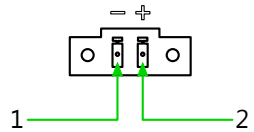

LED Indicators

There are two LEDs on the front I/O panel of the ART-5450 that indicate the status of the system:

- PWR LED is green and indicates the status of the system's power status.
- HDD LED is red and indicates any storage activity for the CompactFlash disk.

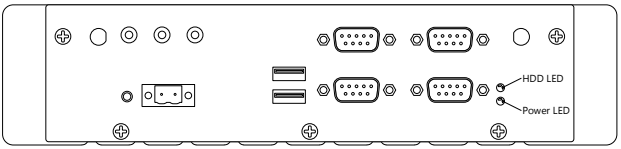

USB Ports: USB Port 1 ~ Port 4

The ART-5450 has four USB 2.0 ports (USB1 ~ USB4). The USB1 and USB2 ports are located on front panel while USB3 and USB4 are located on rear panel. Each USB port supports Plug and Play and hot swapping for external devices. The USB interface complies with USB UHCI, Rev. 2.0.

Pin	Signal
1	VCC
2	USB_P0-
3	USB_P0+
4	GND

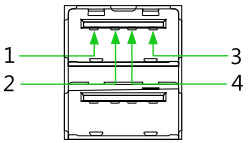

COM PORTS

The ART-5450 has four D-sub 9-pin ports named COM1, COM2, COM3 and COM4.

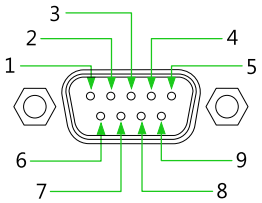

COM1 and COM2 Ports

The ART-5450 provides two D-sub 9-pin ports (COM1 and COM2) for RS-232/422/485 serial communications on the front panel.

	RS-232	RS-422	RS-485
Pin	Signal	Signal	Signal
1	DCD	Tx-	DATA-
2	RxD	Tx+	DATA+
3	TxD	Rx+	NC
4	DTR	Rx-	NC
5	GND	GND	GND
6	DSR	NC	NC
7	RTS	NC	NC
8	CTS	NC	NC
9	RI	NC	NC

The default setting of COM1 and COM2 is RS-232. Both COM1 and COM2 can be configured to operate in RS-232, RS-422 or RS-485 mode by adjusting the BIOS Setup items of "COM1 RS-232/422/485 Type" and "COM2 RS-232/422/485 Type" in "Super I/O COM Ports (UARTS)" of "Super I/O Device" of "Integrated Peripherals" in the BIOS Setup menus.

Note:
NC represents "No Connection"

COM3 and COM4 Ports

The ART-5450 provides two D-sub 9-pin ports that offer standard RS-232 serial communications interface. These ports are COM3 and COM4 on the front panel.

Pin	Signal
1	DCD
2	RxD
3	TxD
4	DTR
5	GND
6	DSR
7	RTS
8	CTS
9	RI

UART Port

The ART-5450 provides one UART 9-pin port.

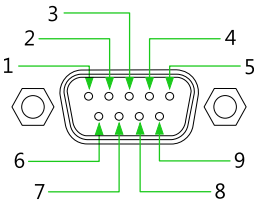

Pin	Signal
1	NC
2	RXD2
3	TXD2
4	NC
5	GND
6	NC
7	NC
8	NC
9	GPO_64

GPIO Port

The ART-5450 provides one GPIO 9-pin port.

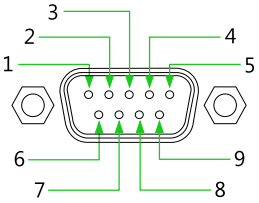

Pin	Signal
1	GPO_50
2	GPO_52
3	GPI_54
4	GPI_56
5	GND
6	GPO_51
7	GPO_53
8	GPI_55
9	GPI_57

VGA Port

The ART-5450 provides a high resolution VGA interface through the D-sub 15-pin VGA port on the rear I/O panel. It supports resolutions up to 1920 x 1200. The pin assignments for the VGA display are shown below.

Pin	Signal
1	Red
2	Green
3	Blue
4	NC
5	GND
6	GND
7	GND
8	GND
9	NC
10	GND
11	NC
12	NC
13	H-SYNC
14	V-SYNC
15	NC

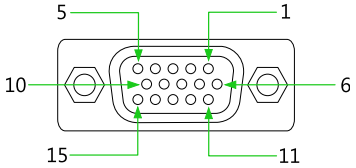

LVDS Ports: LVDS1 and LVDS2

The ART-5450 supports two 24-bit single-channel LVDS interfaces through two D-sub 26-pin connectors (LVDS1 and LVDS2) at the rear I/O panel. Both connectors also carry the inverter control signals, and can directly connect to two LVDS LCD displays via external cables.

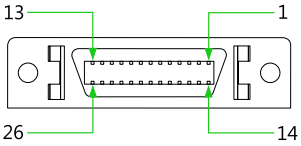

Backlight and Brightness Controls

Both LVDS1 and LVDS2 ports include built-in backlight and brightness control signals. These control signals (BLON, BRIGHTNESS_CTL, +12V, +5V, and GND) enable developers/applications to connect these signals to an LCD inverter to implement the LCD backlight on/off control and brightness control.

The BLON signal is required for controlling the backlight. The BRIGHTNESS_CTL signal can be connected to an LCD's inverter to enable an application to implement brightness adjustment through a software utility. The +12V, +5V deliver the required power to the inverter.

LVDS1

Pin	Signal	Pin	Signal
1	+LCLK1	14	GND
2	-LCLK1	15	+LD1C3
3	GND	16	-LD1C3
4	+LD1C2	17	GND
5	-LD1C2	18	GND
6	GND	19	+LD1C1
7	+LD1C0	20	-LD1C1
8	-LD1C0	21	GND
9	SPCLK1	22	SPD1
10	PVDD1	23	PVDD1
11	IVDD1_12V	24	IVDD1_12V
12	BLON1	25	BRIGHTNESS_CTL1
13	IVDD1_5V	26	IVDD1_5V

LVDS2

Pin	Signal	Pin	Signal
1	+LCLK2	14	GND
2	-LCLK2	15	+LD2C3
3	GND	16	-LD2C3
4	+LD2C2	17	GND
5	-LD2C2	18	GND
6	GND	19	+LD2C1
7	+LD2C0	20	-LD2C1
8	-LD2C0	21	GND
9	SPCLK2	22	SPD2
10	PVDD2	23	PVDD2
11	IVDD2_12V	24	IVDD2_12V
12	BLON2	25	BRIGHTNESS_CTL2
13	IVDD2_5V	26	IVDD2_5V

LCD Signal Power 3.3V/5V Switch

The system also has two jumpers labeled "PVDD1_SEL" and "PVDD2_SEL" (on the internal system board) that correspond to LVDS1 and LVDS2, respectively. These jumpers are for selecting either 3.3V or 5V. Refer to page 47 and 48 for the jumper settings. The default setting of both jumpers is 3.3V.

AUDIO PORTS

The ART-5450 offers high definition audio output through three 3.5mm TRS audio jacks at the rear I/O panel.

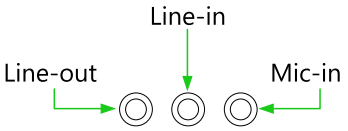

Connector	Type
Line-out	TRS jack, 3.5mm Ø 5P, 90 Degree, Female, shielded
Line-in	TRS jack, 3.5mm Ø 5P, 90 Degree, Female, shielded
Mic-in	TRS jack, 3.5mm Ø 5P, 90 Degree, Female, shielded

GIGABIT ETHERNET PORTS 1 AND 2

The ART-5450 system is equipped with two VIA VT6130 PCIe Gigabit Ethernet controllers on the mainboard. The controllers provide support for two Gigabit Ethernet RJ-45 ports (LAN1 and LAN2) on rear I/O panel.

Both ports are fully compliant with IEEE 802.3 (10BASE-T), 802.3u (100BASE-TX), and 802.3ab (1000BASE-T) standards. The pin assignments of LAN1 and LAN2 ports are shown below.

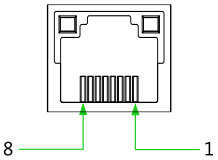

LAN1

Pin	Signal
1	LAN1_TD0+
2	LAN1_TD0-
3	LAN1_TD1+
4	LAN1_TD1-
5	LAN1_TD2+
6	LAN1_TD2-
7	LAN1_TD3+
8	LAN1_TD3-

LAN2

Pin	Signal
1	LAN2_TD0+
2	LAN2_TD0-
3	LAN2_TD1+
4	LAN2_TD1-
5	LAN2_TD2+
6	LAN2_TD3-
7	LAN2_TD3+
8	LAN2_TD3-

Both LAN1 and LAN2 are equipped with two LED indicators located to show its active/link status and speed status.

LAN LED Status

	Link LED (Left LED on RJ-45 port)	**Active LED** (Right LED on RJ-45 port)
Active	The LED always On in different color, and it depends on different of LAN connection speed	Flash in Orange color
Link	The LED always On in different color, and it depends on different of LAN connection speed	LED is off
Speed_10Mbit	The LED is always On in Orange color	Flash in Orange color
Speed_100 Mbit	The LED is always On in Green color	Flash in Orange color
Speed_1000 Mbit	The LED is always On in Red color	Flash in Orange color

3

Hardware Installation

This chapter provides you with information about hardware installation procedures. It is recommended to use a grounded wrist strap before handling computer components. Electrostatic discharge (ESD) can damage some components.

How to remove the cover

Step 1

Remove the eight screws on the top of the chassis.

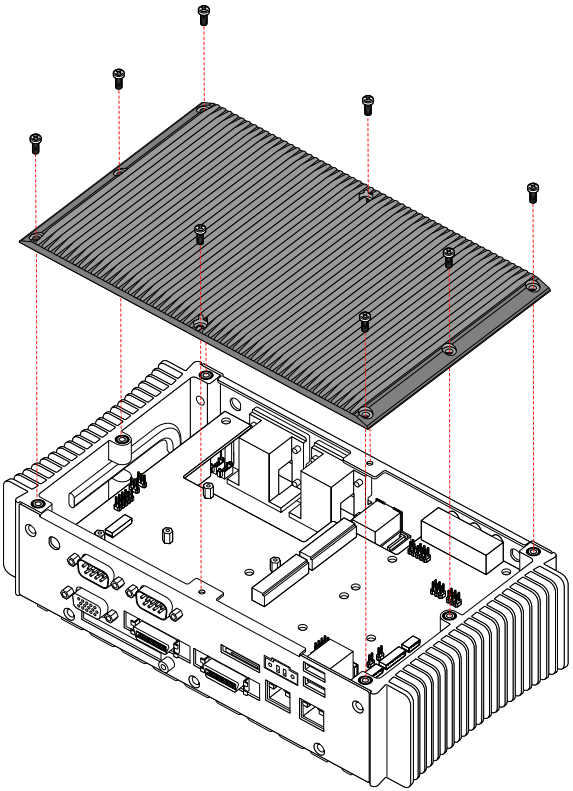

Step 2

Lift up the cover slowly and carefully. Make sure not to catch the long portion of the heatsink on the upper board.

How to install memory

Step 1

Align the notch on the memory module with the notch on the SODIMM socket.

Step 2

Insert the memory module into the SODIMM socket at the 30 degree angle. Then push down until the memory module snaps into place. The SODIMM socket has two locking mechanisms that will click once the memory module has been fully inserted.

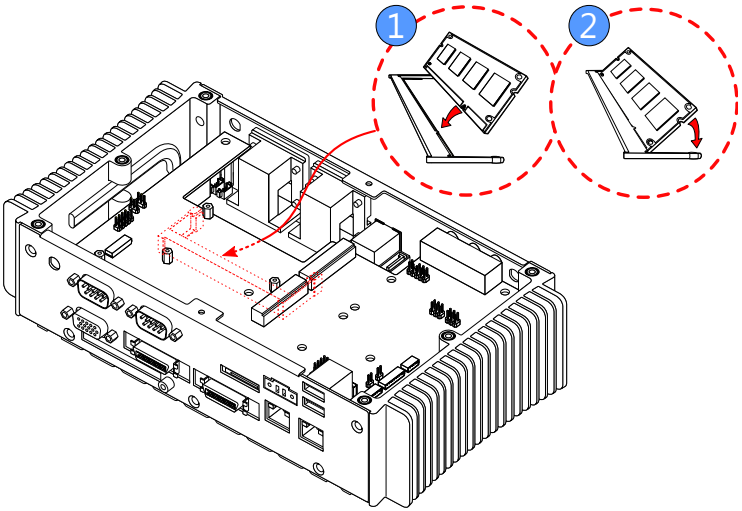

How to install the WLAN module

Step 1

Locate the mounting holes for the WLAN module. The mounting holes have two standoffs pre-mounted on the upper board directly above the SODIMM socket.

Step 2

Align the two mounting holes on the WLAN module with the mounting holes on the standoffs.

Step 3

Secure the WLAN module in place with the two screws provided with the WLAN kit.

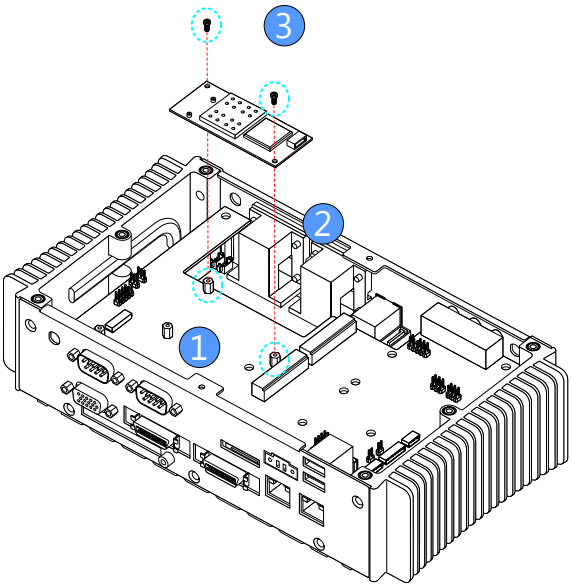

Step 4

Insert one end of the WLAN signal cable into the connector on the WLAN module. Be sure to have the metal contacts facing down before inserting.

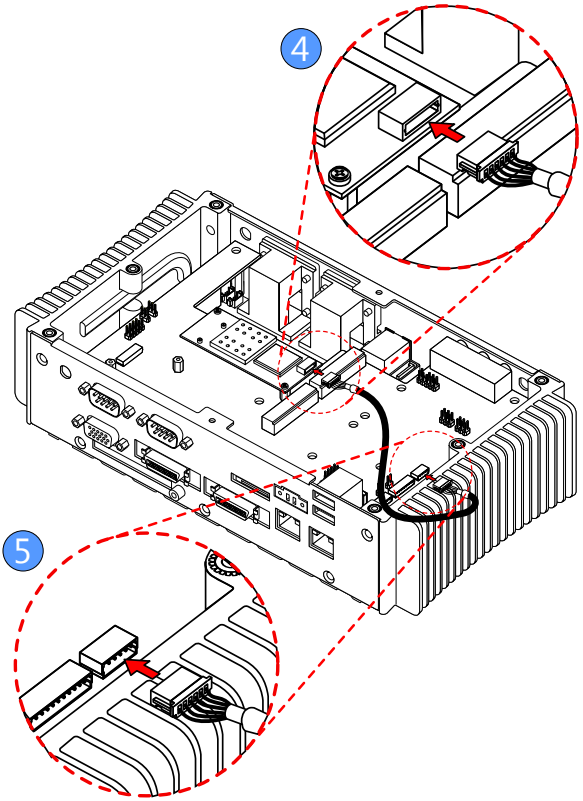

Step 5

Insert the other end of the WLAN signal cable into the connector labeled JWLAN1 on the upper board. Be sure to have the metal contacts facing down before inserting.

Step 6

Remove the WLAN antenna hole cover from the chassis. To facilitate removing the cover, use a pair of needle-nose pliers to depress both locking clips simultaneously.

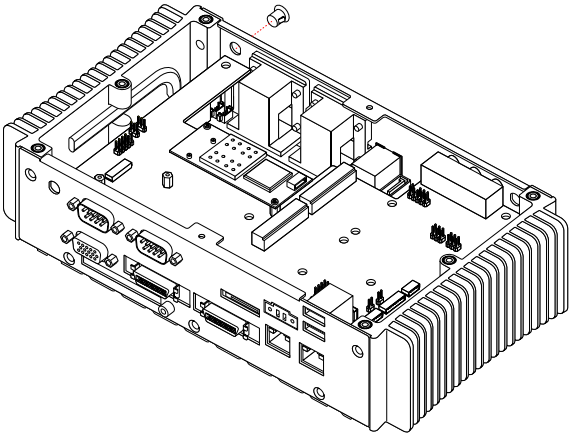

Step 7

Insert the antenna cable (provided with the WLAN kit) into the WLAN antenna hole from the inside. Make sure the flat side of the antenna jack matches the flat side of the antenna hole.

Step 8

Secure the WLAN antenna jack to the chassis with the toothed washer and nut.

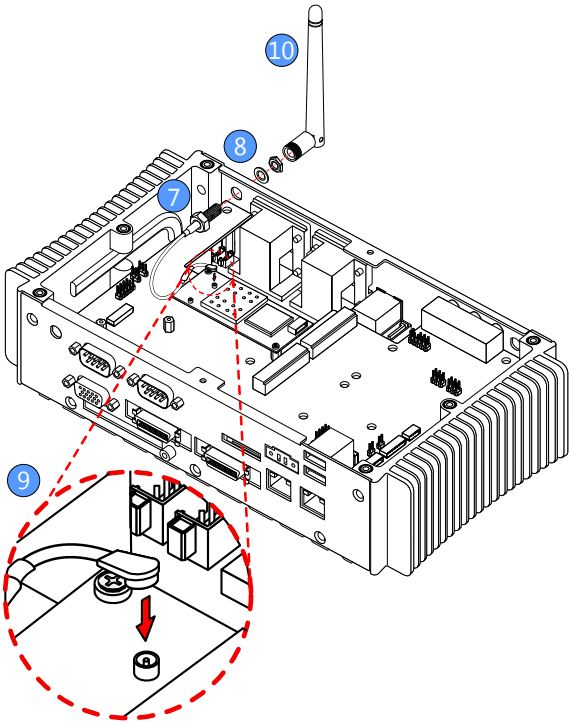

Step 9

Connect the other end of the WLAN antenna cable to the micro-RF connector labeled MAIN on the WLAN module.

Step 10

Attach the antenna provided with the WLAN kit to the WLAN antenna jack.

How to install the GPS module

Step 1

Insert one end of the GPS signal cable into the connector on the GPS module. Be sure to have the metal contacts facing down before inserting.

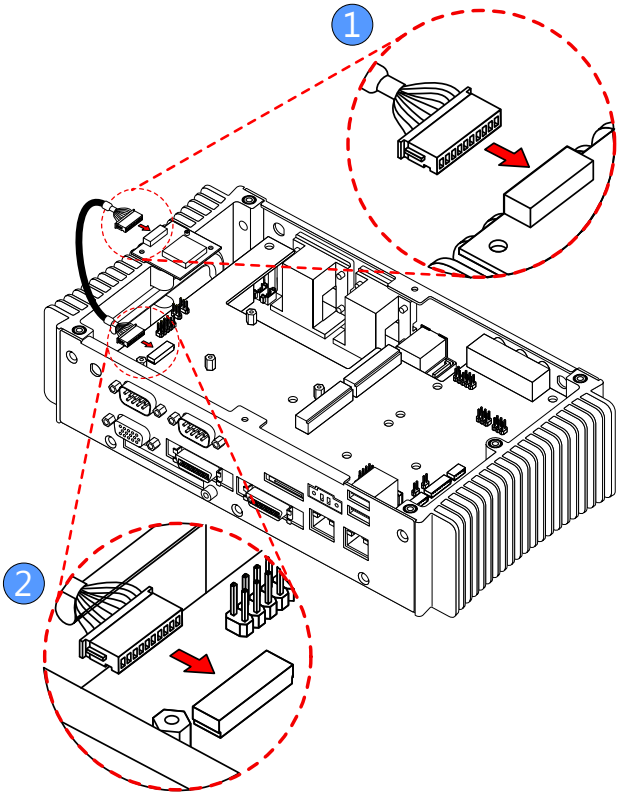

Step 2

Insert the other end of the GPS signal cable into the connector labeled JGPS1 on the upper board. Be sure to have the metal contacts facing down before inserting.

Step 3

Locate the mounting holes for the GPS module. The mounting holes have two standoffs pre-mounted on the upper board next to the mounting location of the WLAN module.

Step 4

Align the two mounting holes on the GPS module with the mounting holes on the standoffs.

Step 5

Secure the GPS module in place with the two screws provided with the GPS kit.

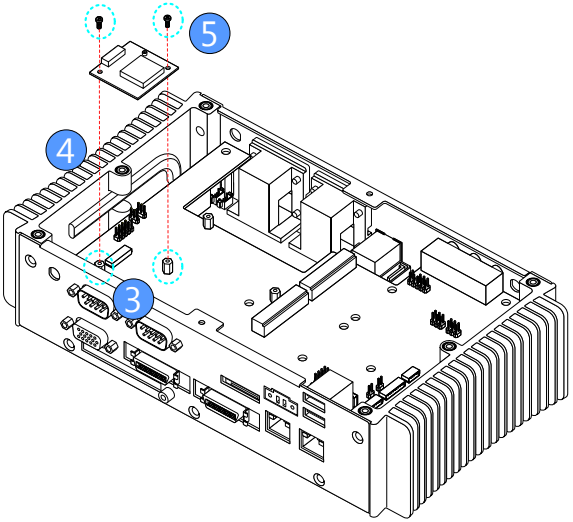

Step 6

Remove the GPS antenna hole cover from the chassis. To facilitate removing the cover, use a pair of needle-nose pliers to depress both locking clips simultaneously.

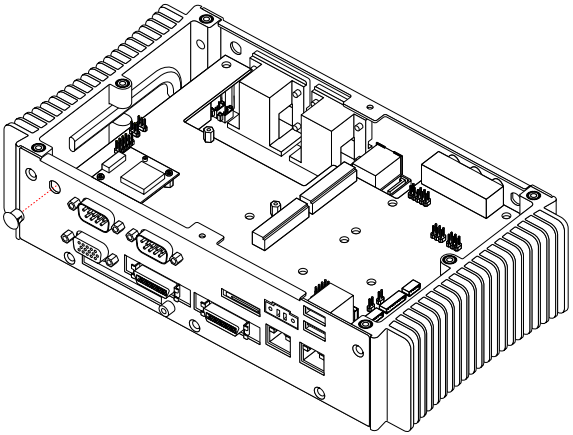

Step 7

Insert the antenna cable (provided with the GPS kit) into the GPS antenna hole from the inside. Make sure the flat side of the antenna jack matches the flat side of the antenna hole.

Step 8

Secure the GPS antenna jack to the chassis with the toothed washer and nut.

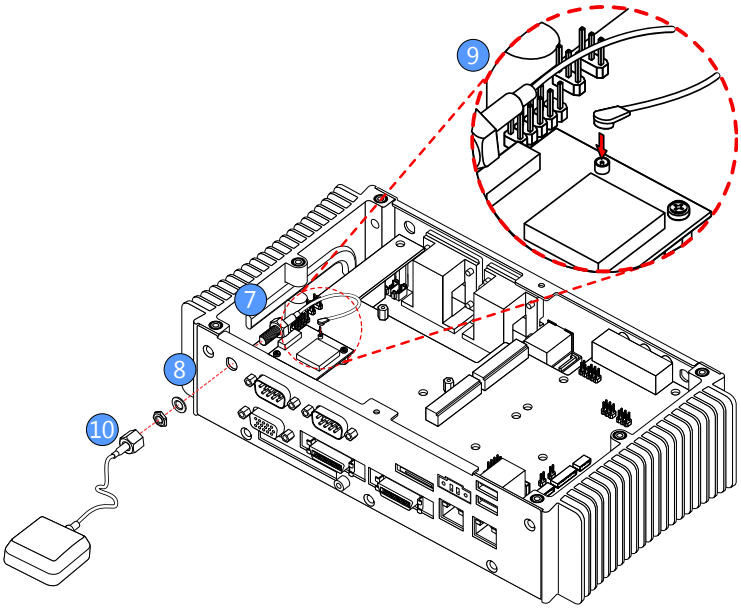

Step 9

Connect the other end of the GPS antenna cable to the micro-RF connector on the GPS module.

Step 10

Attach the antenna provided with the GPS kit to the GPS antenna jack.

How to install the Mobile Broadband modules

Step 1

Locate the Mini-PCIe slots (MINIPCIE1 and MINIPCIE2) near the center of the upper board.

Step 2

Align the notch on the Mobile Broadband module with the notch on the Mini-PCIe slot.

Step 3

Insert the Mobile Broadband module horizontally into the Mini-PCIe slot.

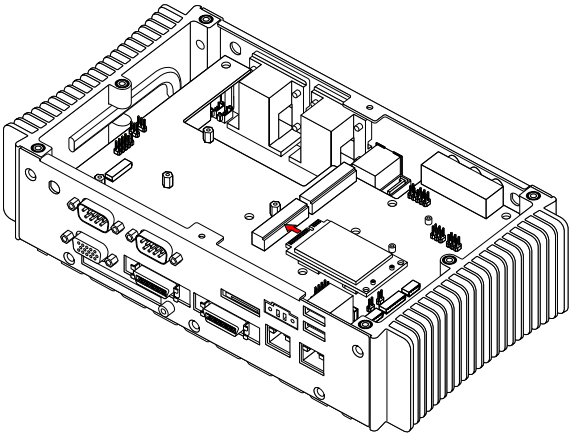

Step 4

Once the module has been fully inserted, secure the module with two screws to the standoffs.

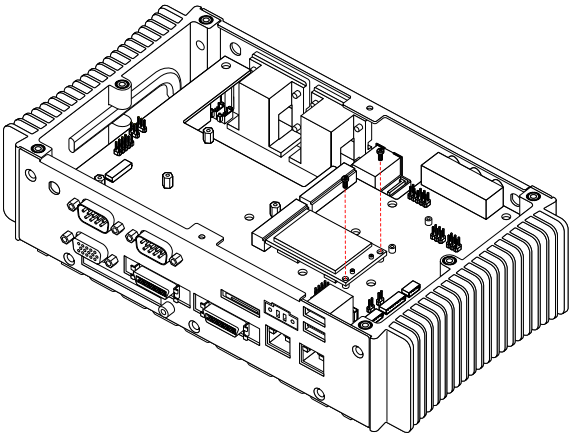

Step 5

Remove the Mobile Broadband antenna hole cover from the chassis. To facilitate removing the cover, use a pair of needle-nose pliers to depress both locking clips simultaneously.

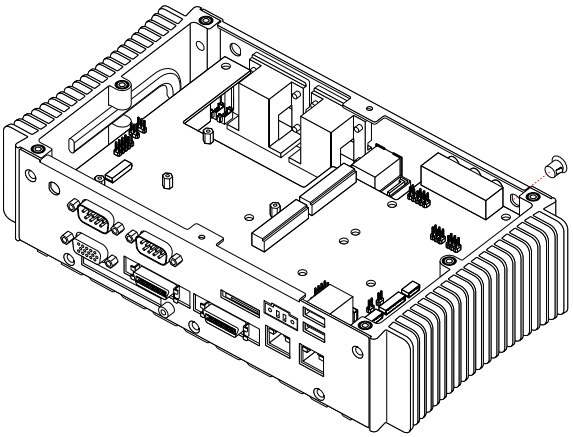

Step 6

Insert the antenna cable into the Mobile Broadband antenna hole from the inside. Make sure the flat side of the antenna jack matches the flat side of the antenna hole.

Step 7

Secure the Mobile Broadband antenna jack to the chassis with the toothed washer and nut.

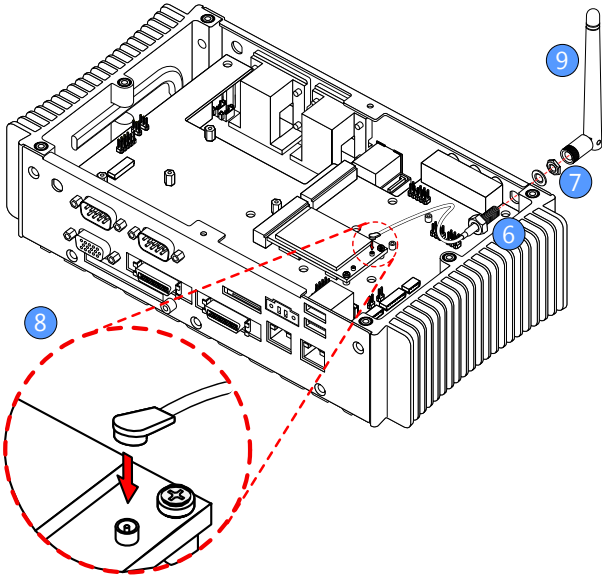

Step 8

Connect the other end of the WLAN antenna cable to the micro-RF connector on the Mobile Broadband module.

Step 9

Attach the antenna provided with the Mobile Broadband kit to the Mobile Broadband antenna jack.

How to install the Mounting Brackets

Step 1

Prepare the left and right brackets and the four screws.

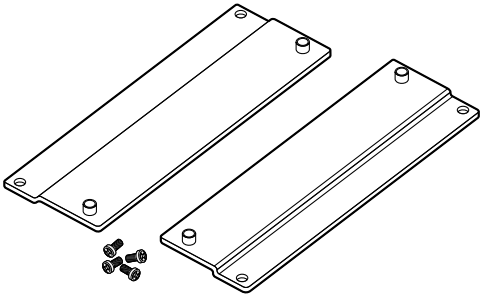

Step 2

Fasten the mounting brackets to the bottom side of the ART-5450 chassis as shown.

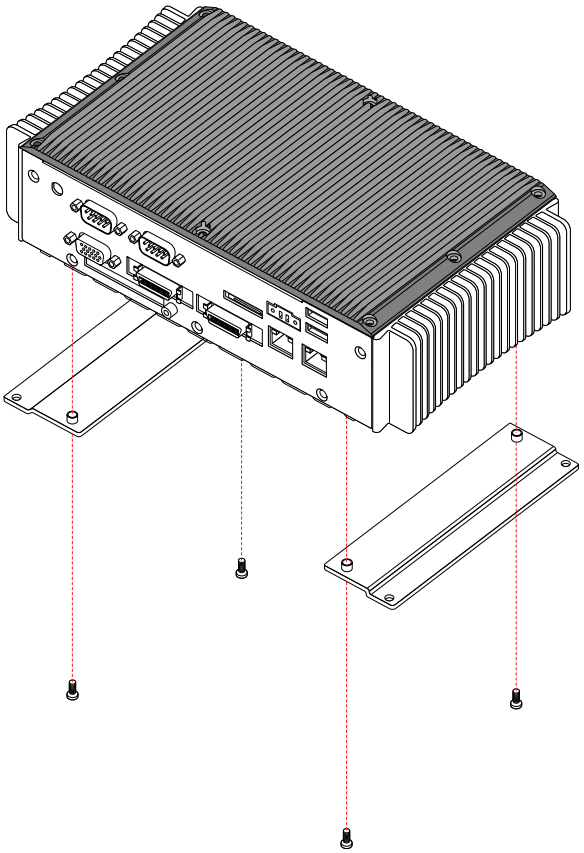

Step 3

Secure both mounting brackets to the wall/table with four screws.

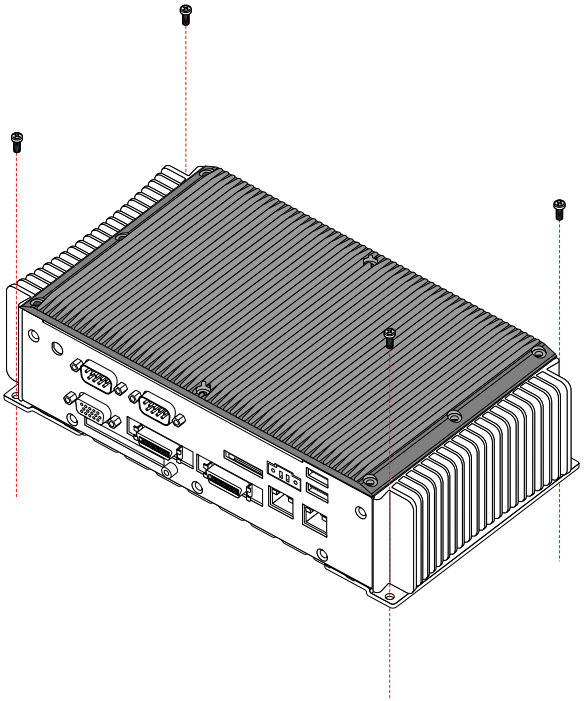

How to install the PWM-1000

Refer to Appendix A for the pinouts.

Step 1

Connect the power cable to the DC-in port on the front IO panel of the ART-5450.

Step 2

Connect the GPIO cable to COM1 on the front IO panel of the ART-5450.

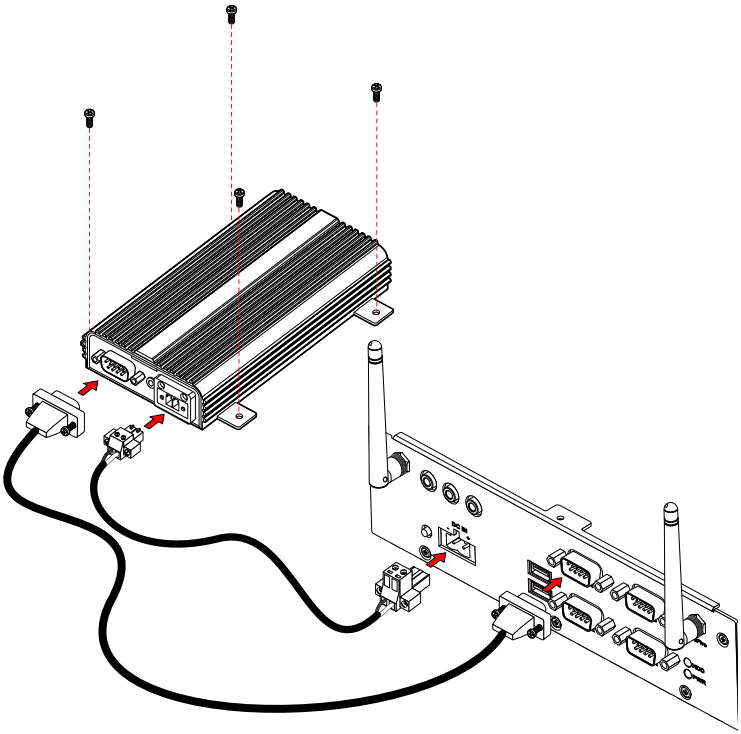

Step 3

Mount the PWM-1000 with four M3 screws. Be sure to mount the module close to the power source.

Step 4

Connect the power module to the power source using the provided cable.

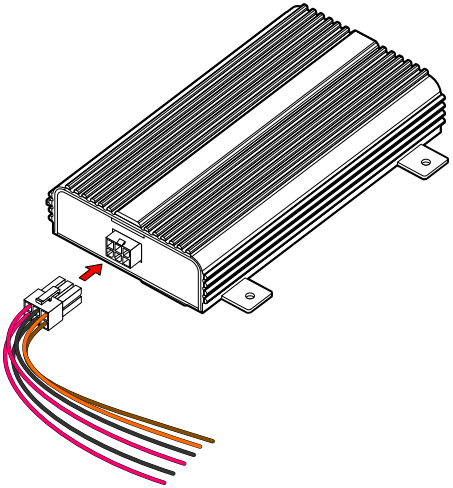

PWM-1000 Pinouts

DC Output Connector

Pin	Signal
1	+12V out
2	GND

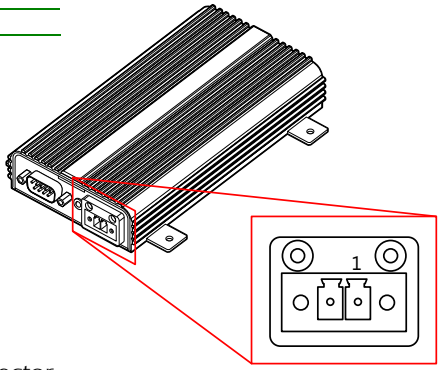

UART/GPI Connector

Pin	Signal
1	NC
2	RXDA1
3	TXDA1
4	NC
5	GND
6	NC
7	NC
8	NC
9	GPI

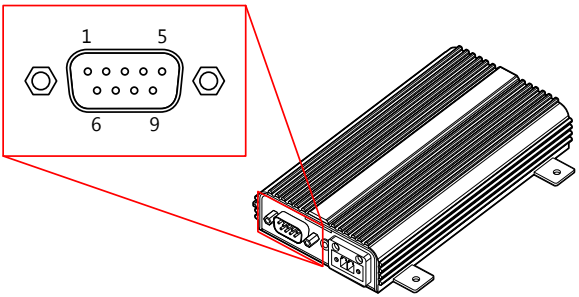

Power Input Connector

Pin	Signal
1	IGN2
2	GND
3	DC 10~30V
4	ACC
5	GND
6	DC 10~30V

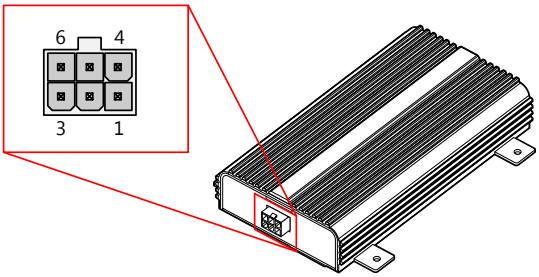

4

Jumper Settings

This section will explain how to configure the ART-5450 to match the needs of your application by setting the jumpers.

BASIC JUMPER CONFIGURATION

The ART-5450 internal board provides a jumper for setting some system hardware functions. The jumper is the simplest kind of electrical switch. It consists of two metal pins and a small metal clip. It is often protected by a plastic cover that slides over the pins to connect them. In order to "close" a jumper, you should connect the pins with the clip. And remove the clip in order to "open" the jumper. Sometimes a jumper will have three pins which labeled 1, 2, and 3. In this case, you would connect either pins 1 and 2 or pins 2 and 3.

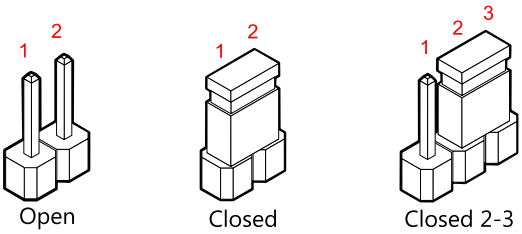

Note:
A pair of needle nose pliers may be helpful when setting up the jumpers. If you have any doubts about the proper hardware configuration for your application, contact your local distributor or sales representative before you make any changes.

CLEAR_CMOS: CLEAR CMOS JUMPER

The CMOS RAM is located on the lower board (motherboard) in the ART-5450 system. It stores system configuration data and has an onboard battery power supply. To reset the CMOS settings, set the jumper on pin 2 and 3 while the system is off. Return the jumper to pin 1 and 2 afterwards. Setting the jumper while the system is on will damage the mainboard.

Setting	1	2	3
Normal Operation (default)	ON	ON	OFF
Clear CMOS setting	OFF	ON	ON

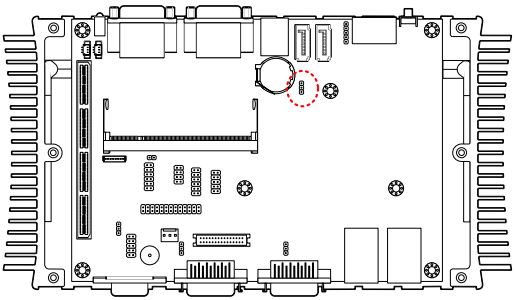

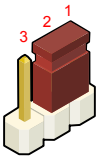

Closed 1-2 (Default)

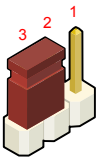

Closed 2-3 (Clear CMOS)

Caution:
Except when clearing the RTC RAM, never remove the CLEAR_CMOS jumper cap from the default position. Removing the cap will cause system boot failure. Avoid clearing the CMOS while the system is on; it will damage the mainboard.

AT/ATX POWER MODE SELECT

The ART-5450 supports two kinds of power modes: ATX (default) and AT. The ATX mode requires a standby power connection and a power supply on signal to turn on the main power supply. The AT mode does not require a standby power connection but needs to be connected to ground to boot up properly.

The power mode can be set by changing the jumper position on the 3-pin AT/ATX pin header. The AT/ATX power mode jumper is located on the lower board (motherboard) in the ART-5450 system.

Setting	1	2	3
AT mode	ON	ON	OFF
ATX mode (default)	OFF	ON	ON

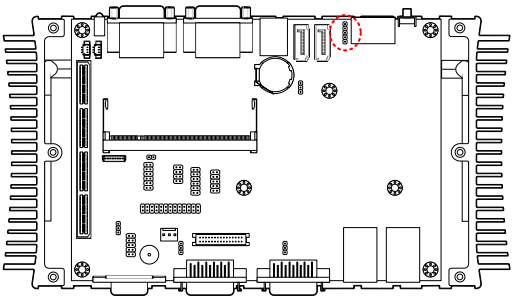

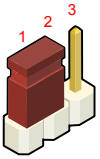

Closed 1-2 (AT Mode)

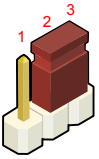

Closed 2-3 (ATX Mode)

PVDD1_SEL: LCD POWER JUMPER

The ART-5450 system motherboard provides an onboard jumper named "PVDD1_SEL" for setting the LCD signal power to either 5V or 3.3V for LVDS1 connector on rear I/O panel.

When connecting the LVDS LCD Panel display to LVDS1, the setting of PVDD1_SEL must match the power requirements of the connected LVDS Panel display. The default setting of PVDD1_SEL is 3.3V

Setting	1	2	3
+3.3V (default)	ON	ON	OFF
+5V	OFF	ON	ON

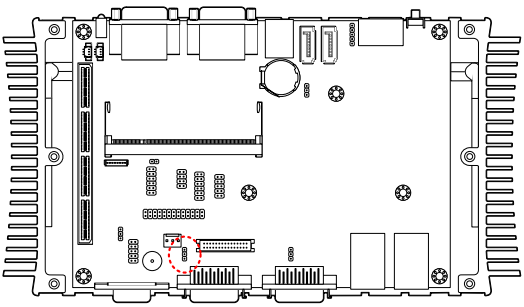

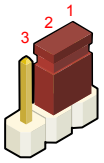

Closed 1-2 (+3.3V)

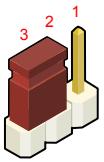

Closed 2-3 (+5V)

PVDD2_SEL: LCD POWER JUMPER

The ART-5450 system motherboard provides an onboard jumper named "PVDD2_SEL" for setting the LCD signal power to either 5V or 3.3V.

When connecting the LVDS LCD Panel display to LVDS2 on rear I/O panel, the setting of PVDD2_SEL must match the power requirements of the connected LVDS Panel display. The default setting of PVDD2_SEL is 3.3V

Setting	1	2	3
+3.3V (default)	ON	ON	OFF
+5V	OFF	ON	ON

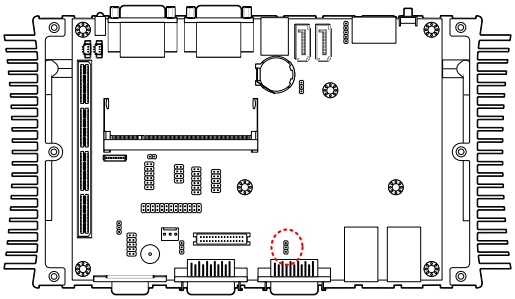

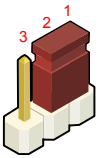

Closed 1-2 (+3.3V)

Closed 2-3 (+5V)

5

BIOS Setup

This chapter gives a detailed explanation of the BIOS setup functions.

Entering the BIOS Setup Menu

Power on the computer and press Delete during the beginning of the boot sequence to enter the BIOS setup menu. If you missed the BIOS setup entry point, restart the system and try again.

Control Keys

Keys	Description
Up	Move to the previous item
Down	Move to the next item
Left	Move to the item in the left side
Right	Move to the item in the right side
Enter	Select the item
Esc	Jumps to the Exit menu or returns to the main menu from a submenu
Page up	Increase the numeric value or make changes
Page down	Decrease the numeric value or make changes
+ (number pad)	Increase the numeric value or make changes
- (number pad)	Decrease the numeric value or make changes
F1	General help, only for Status Page Setup Menu and Option Page Setup Menu
F5	Restore the previous CMOS value from CMOS, only for Option Page Setup Menu
F6	Load the default CMOS value from Fail-Safe default table, only for Option Page Setup Menu
F7	Load Optimized defaults
F10	Save all the CMOS changes and exit

NAVIGATING THE BIOS MENUS

The main menu displays all the BIOS setup categories. Use the Left/Right and Up/Down arrow keys to select any item or sub-menu. Descriptions of the selected/highlighted category are displayed at the bottom of the screen.

The small triangular arrowhead symbol next to a field indicates that a sub-menu is available (see figure below). Press Enter to display the sub-menu. To exit the sub-menu, press Esc.

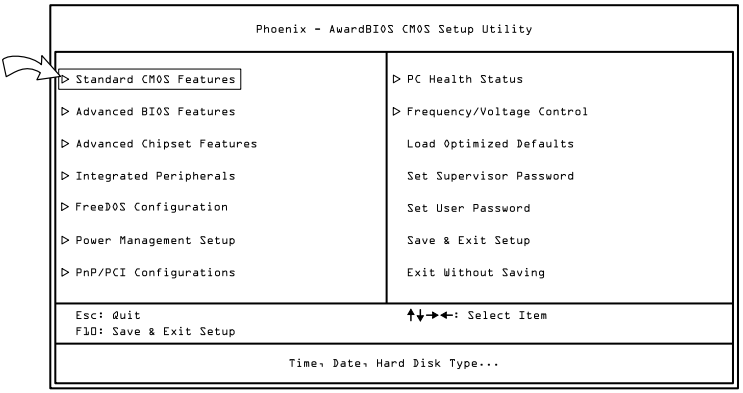

GETTING HELP

The BIOS setup program provides a "General Help" screen. You can display this screen from any menu/sub-menu by pressing F1. The help screen displays the keys for using and navigating the BIOS setup. Press Esc to exit the help screen.

Main Menu

The Main Menu contains thirteen setup functions and two exit choices. Use arrow keys to select the items and press Enter to accept or enter Sub-menu.

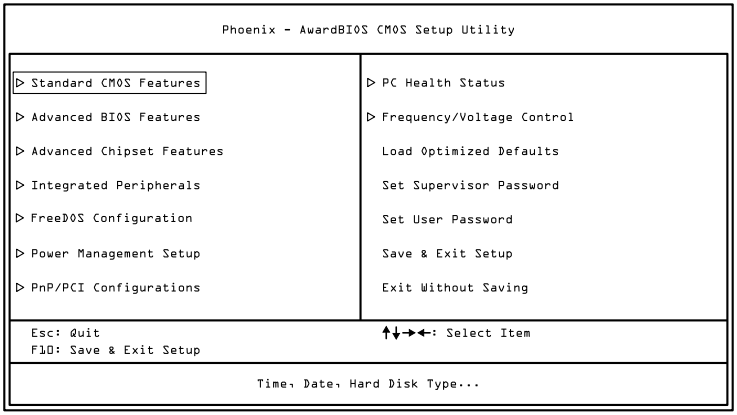

Standard CMOS Features

Use this menu to set basic system configurations.

Advanced BIOS Features

Use this menu to set the advanced features available on your system.

Advanced Chipset Features

Use this menu to set chipset specific features and optimize system performance.

Integrated Peripherals

Use this menu to set onboard peripherals features.

FreeDOS Configuration

Use this menu to boot the system to FreeDOS.

Power Management Setup

Use this menu to set onboard power management functions.

PnP/PCI Configurations
Use this menu to set the PnP and PCI configurations.

PC Health Status
This menu shows the PC health status.

Frequency/Voltage Control
Use this menu to set the system frequency and voltage control.

Load Optimized Defaults
Use this menu option to load BIOS default settings for optimal and high performance system operations.

Set Supervisor Password
Use this menu option to set the BIOS supervisor password.

Set User Password
Use this menu option to set the BIOS user password.

Save & Exit Setup
Save BIOS setting changes and exit setup.

Exit Without Saving
Discard all BIOS setting changes and exit setup.

STANDARD CMOS FEATURES

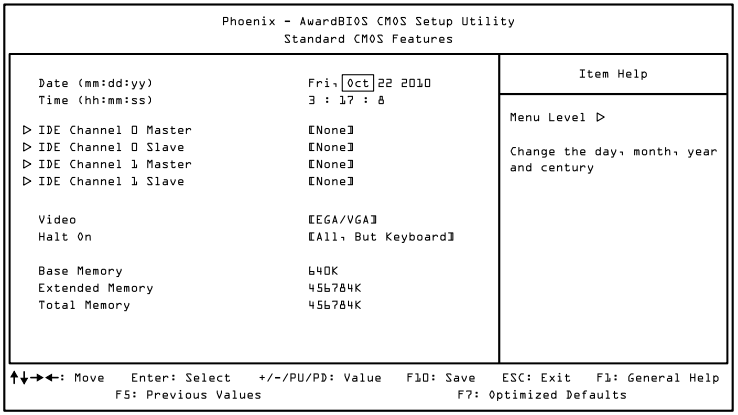

Date

The date format is [Day, Month, Date, Year]

Time

The time format is [Hour : Minute : Second]

Video

Settings: [EGA/VGA, CGA 40, CGA 80, MONO]

Halt On

Set the system's response to specific boot errors. Below is a table that details the possible settings.

Settings	Description
All Errors	System halts when any error is detected
No Errors	System does not halt for any error
All, But Keyboard	System halts for all non-key errors

IDE CHANNELS

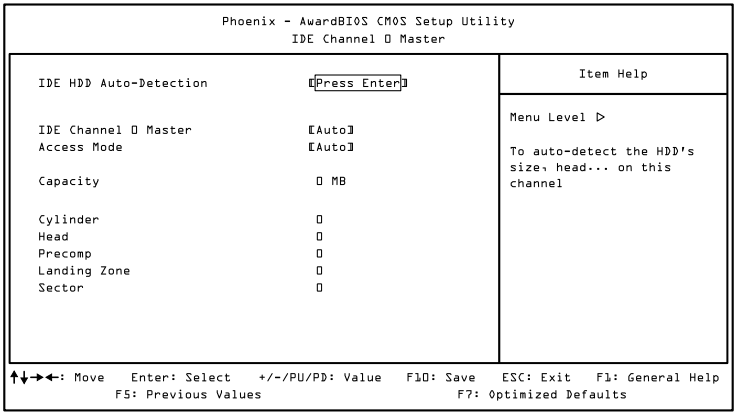

The specifications of your drive must match with the drive table. The hard disk will not work properly if you enter incorrect information in this category. Select "Auto" whenever possible. If you select "Manual", make sure the information is from your hard disk vendor or system manufacturer.

Below is a table that details required hard drive information when using the "Manual" mode.

Settings	Description
IDE Channel	The name of this match the name of the menu. Settings: [None, Auto, Manual]
Access Mode	Settings: [CHS, LBA, Large, Auto]
Capacity	Formatted size of the storage device
Cylinder	Number of cylinders
Head	Number of heads
Precomp	Write precompensation
Landing Zone	Cylinder location of the landing zone
Sector	Number of sectors

ADVANCED BIOS FEATURES

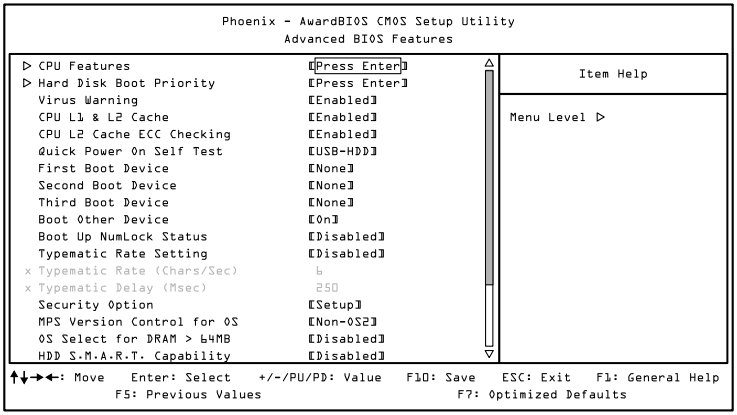

Includes submenus:
- CPU Features
- Hard Disk Boot Priority

Virus Warning

Allows you to choose the VIRUS warning feature for IDE Hard Disk boot sector protection.

Settings	Description
Enabled	Turns on hard disk boot sector virus protection
Disabled	Turns off hard disk boot sector virus protection

Note:
If this function is enabled and someone attempt to write data into this area, BIOS will show a warning message on the screen and alarm beep.

CPU L1 & L2 Cache

Settings	Description
Disabled	Turns off CPU L1 & L2 cache
Enabled	Turns on CPU L1 & L2 cache

CPU L2 Cache ECC Checking

Settings: [Enabled, Disabled]

Quick Power On Self-Test

Shortens Power On Self-Test (POST) cycle to enable shorter boot up time.

Settings	Description
Disabled	Standard Power On Self Test (POST)
Enabled	Shorten Power On Self Test (POST) cycle and boot up time

First/Second/Third Boot Device

Set the boot device sequence as BIOS attempts to load the disk operating system.

Settings	Description
LS120	Boot from LS120
Hard Disk	Boot from the HDD
CDROM	Boot from CDROM
ZIP100	Boot from ZIP100
USB-FDD	Boot from USB Floppy
USB-ZIP	Boot from USB ZIP drive
USB-CDROM	Boot from USB CDROM
Legacy LAN	Boot from network drive
Disabled	Disable the boot device sequence

Boot Other Device

Enables the system to boot from alternate devices if the system fails to boot from the "First/Second/Third Boot Device" lists.

Settings	Description
Disabled	No alternate boot device allowed
Enabled	Enable alternate boot device

Boot Up NumLock Status

Set the NumLock status when the system is powered on.

Settings	Description
Off	Forces keypad to behave as arrow keys
On	Forces keypad to behave as 10-key

Typematic Rate Setting

Enable "Typematic Rate" function.
Settings: [Disabled, Enabled]

Typematic Rate (Chars/Sec)

This item sets the rate (characters/second) at which the system retrieves a signal from a depressed key.
Settings: [6, 8, 10, 12, 15, 20, 24, 30]

Typematic Delay (Msec)

This item sets the delay between, when the key was first pressed and when the system begins to repeat the signal from the depressed key.
Settings: [250, 500, 750, 1000]

Security Option

Selects whether the password is required every time the System boots, or only when you enter Setup.

Settings	Description
Setup	Password prompt appears only when end users try to run BIOS Setup
System	Password prompt appears every time when the computer is powered on and when end users try to run BIOS Setup

MPS Version Control for OS

Settings: [1.1, 1.4]

OS Select for DRAM > 64 MB

Settings: [Non-OS2, OS2]

HDD S.M.A.R.T Capability

Settings: [Disabled, Enabled]

Video BIOS Shadow

Settings: [Disabled, Enabled]

Full Screen Logo Show

Show full screen logo during BIOS boot up process.
Settings: [Disabled, Enabled]

Summary Screen Show

Show summary screen.
Settings: [Disabled, Enabled]

CPU FEATURES

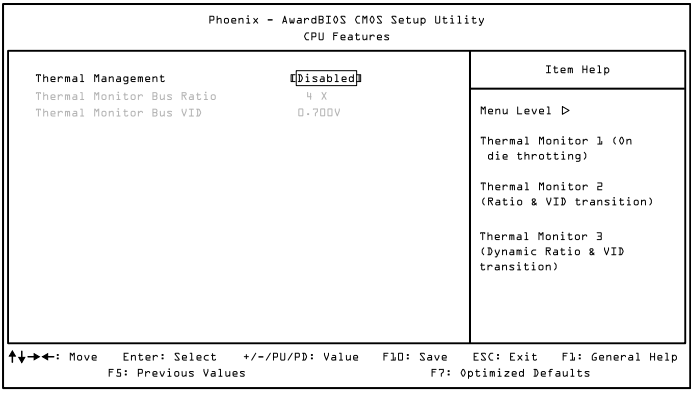

Thermal Management

This item sets CPU's thermal control rule to protect CPU from overheat.

Settings	Description
Thermal Monitor 1	On-die throtting
Thermal Monitor 2	Ratio & VID transition
Thermal Monitor 3	Dynamic Ratio & VID transition
Disabled	Disable the thermal monitor

Thermal Monitor Bus Ratio

This item sets the frequency (bus ratio) of the throttled performance that will be initiated when one on die sensor goes from not hot to hot. The value is fixed at "4X".

Thermal Monitor Bus VID

This item sets the voltage of the throttled performance that will be initiated when the on die sensor goes from not hot to hot. The value is fixed at "0.700 V".

HARD DISK BOOT PRIORITY

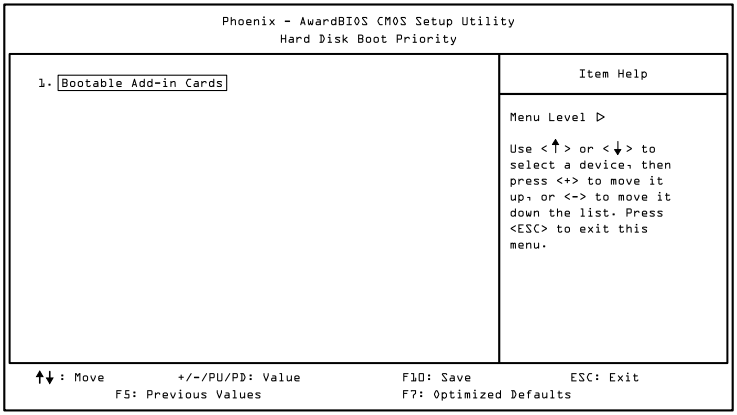

This is for setting the priority of the hard disk boot order when the "Hard Disk" option is selected in the "[First/Second/Third] Boot Device" menu item.

ADVANCED CHIPSET FEATURES

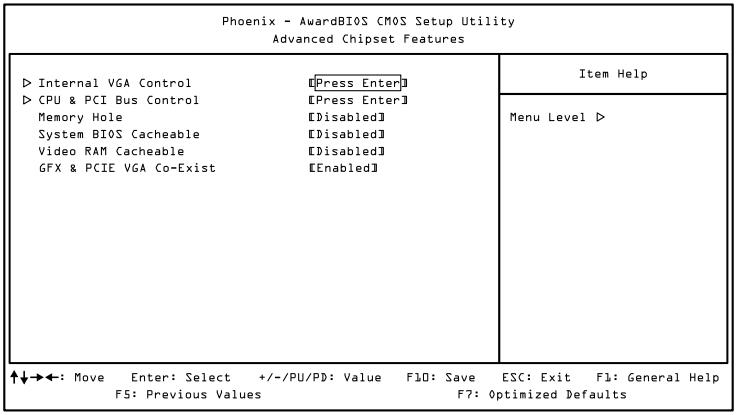

Caution:
The Advanced Chipset Features menu is used for optimizing the chipset functions. Do not change these settings unless you are familiar with the chipset.

Includes submenus:
- Internal VGA Control
- CPU & PCI Bus Control

Memory Hole

Settings: [Disabled, 15M – 16M]

System BIOS Cacheable

Settings: [Disabled, Enabled]

Video RAM Cacheable

Settings: [Disabled, Enabled]

GFX & PCIE VGA Co-Exist

Settings: [Disabled, Enabled]

INTERNAL VGA CONTROL

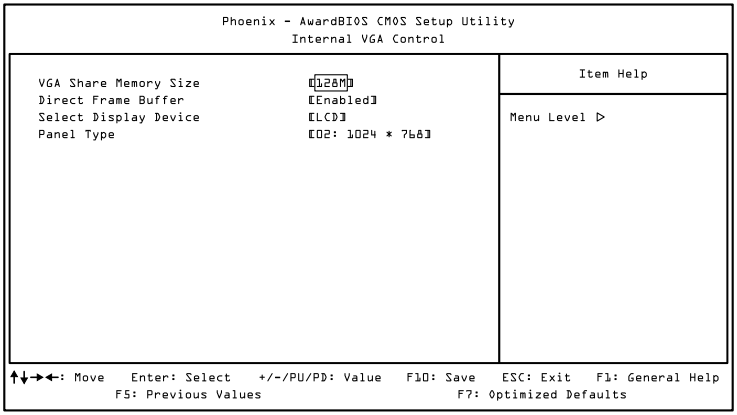

VGA Share Memory Size

This setting allows you to select the amount of system memory that is allocated to the integrated graphics processor.
Settings: [Disabled, 64M, 128M, 256M]

Direct Frame Buffer

Settings: [Disabled, Enabled]

Select Display Device

This setting refers to the type of display being used with the system.
Settings: [LCD, LCD2, CRT+LCD, CRT+LCD2, LCD+LCD2]

Panel Type

This setting refers to the native resolution of the display being used with the system.

Settings:

00: 640 x 480
01: 800 x 600
02: 1024 x 768
03: 1280 x 768
04: 1280 x 1024
05: 1400 x 1050
06: 1440 x 900
07: 1280 x 800
08: 800 x 480
09: 1024 x 600
0A: 1366 x 768
0B: 1600 x 1200
0C: 1680 x 1050
0D: 1920 x 1200
0E: 640 x 240
0F: 1024 x 576

CPU & PCI Bus Control

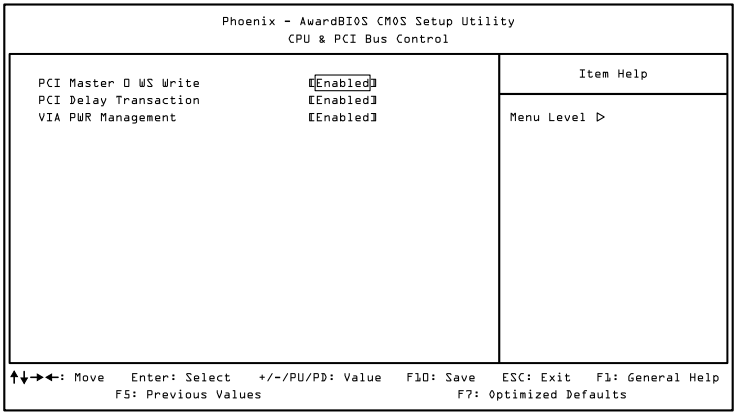

PCI Master 0 WS Write

Settings: [Disabled, Enabled]

PCI Delay Transaction

Settings: [Disabled, Enabled]

VIA PWR Management

Settings: [Disabled, Enabled]

INTEGRATED PERIPHERALS

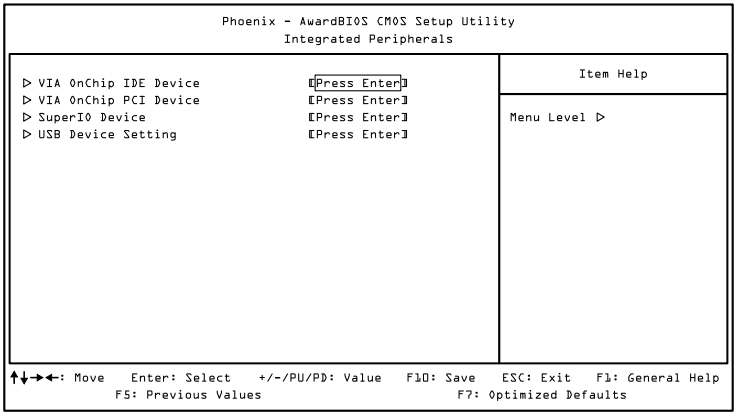

Includes submenus:

- VIA OnChip IDE Device
- VIA OnChip PCI Device
- SuperIO Device
- USB Device Setting

VIA OnChip IDE Device

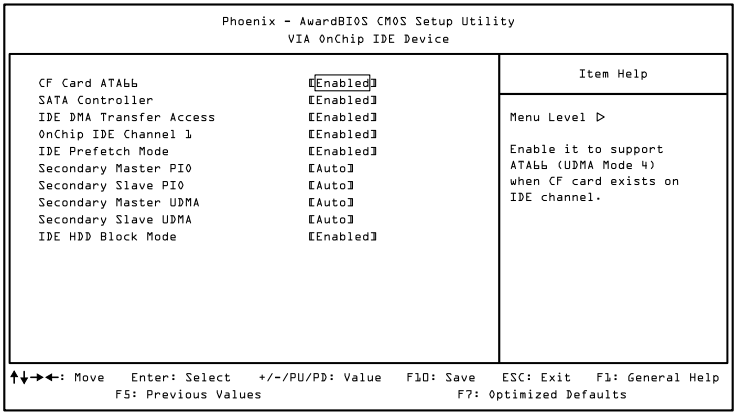

CF Card ATA66

Settings: [Disabled, Enabled]

SATA Controller

Settings: [Disabled, Enabled]

IDE DMA Transfer Access

Settings: [Disabled, Enabled]

OnChip IDE Channel 1

Settings: [Disabled, Enabled]

IDE Prefetch Mode

Settings: [Disabled, Enabled]

Secondary Master PIO

Settings: [Auto, Mode 0, Mode 1, Mode 2, Mode 3, Mode 4]

Secondary Slave PIO

Settings: [Auto, Mode 0, Mode 1, Mode 2, Mode 3, Mode 4]

Secondary Master UDMA
Settings: [Disabled, Auto]

Secondary Slave UDMA
Settings: [Disabled, Auto]

IDE HDD Block Mode
Settings: [Disabled, Enabled]

VIA OnChip PCI Device

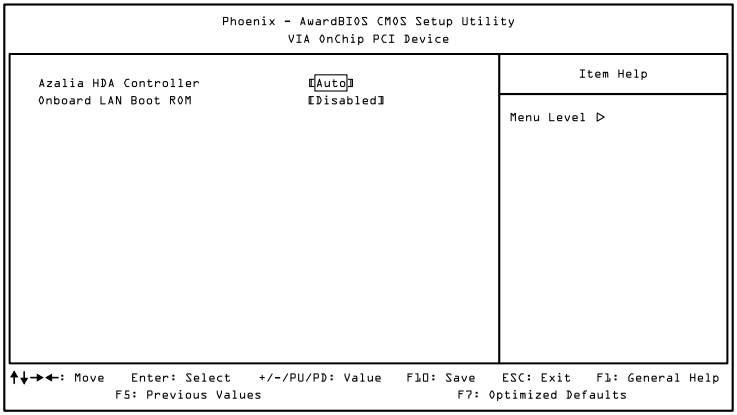

Azalia HDA Controller

Settings: [Disabled, Auto]

OnBoard LAN Boot ROM

Settings: [Enabled, Disabled]

SUPERIO DEVICE

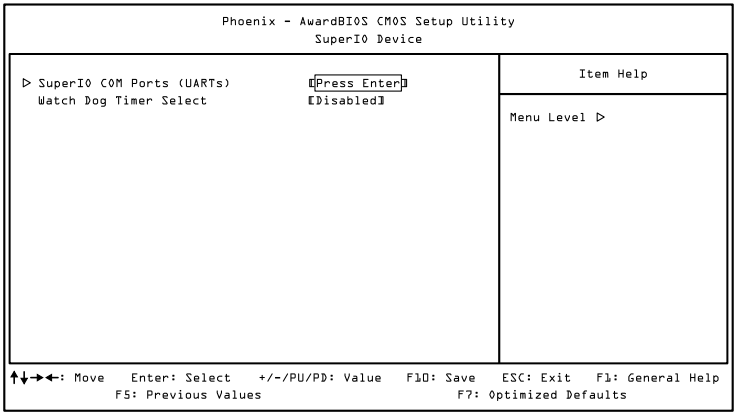

Includes submenu:
- SuperIO COM Ports (UARTs)

Watch Dog Timer Select

Settings: [Disabled, 10 Sec, 20 Sec, 30 Sec, 40 Sec, 1 Min, 2 Min, 4 Min]

SuperIO COM Ports (UARTs)

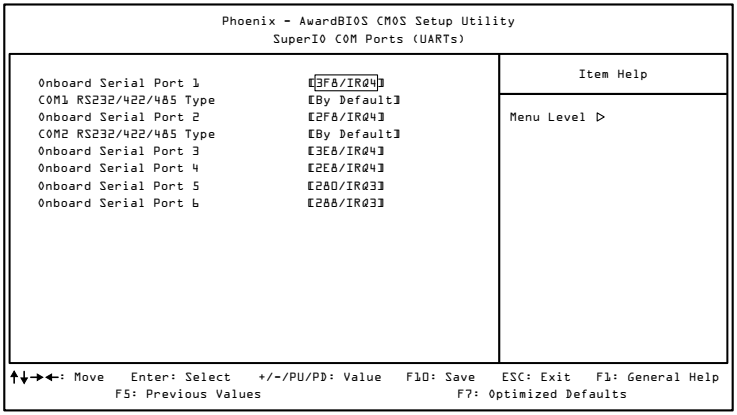

Onboard Serial Port 1

Settings: [Disabled, 3F8/IRQ4, 2F8/IRQ4, 3E8/IRQ4, 2E8/IRQ4]

COM1 RS232/422/485 Type

Settings: [By Default, RS232, RS422, RS485]

Onboard Serial Port 2

Settings: [Disabled, 3F8/IRQ4, 2F8/IRQ4, 3E8/IRQ4, 2E8/IRQ4]

COM2 RS232/422/485 Type

Settings: [By Default, RS232, RS422, RS485]

Onboard Serial Port 3 and 4

Settings: [Disabled, 3F8/IRQ4, 2F8/IRQ4, 3E8/IRQ4, 2E8/IRQ4]

Onboard Serial Port 5 and 6

Settings: [Disabled, 280/IRQ3, 288/IRQ3, 2A0/IRQ3, 2A8/IRQ3, 2B0/IRQ3, 2B8/IRQ3]

USB Device Setting

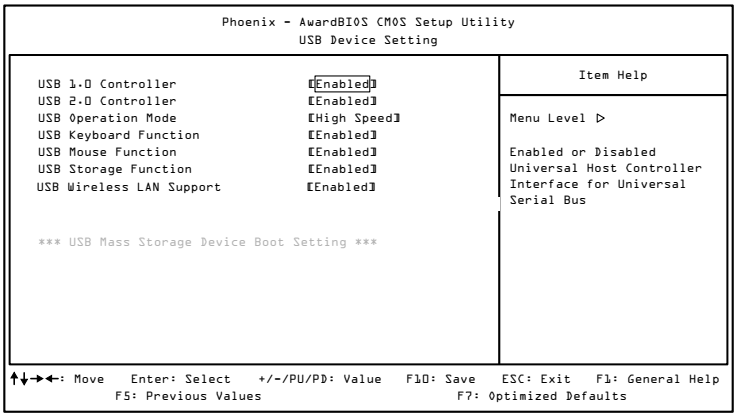

USB 1.0 Controller

Enable or disable Universal Host Controller Interface for Universal Serial Bus.
Settings: [Disabled, Enabled]

USB 2.0 Controller

Enable or disable Enhanced Host Controller Interface for Universal Serial Bus.
Settings: [Disabled, Enabled]

USB Operation Mode

Auto decide USB device operation mode.

Settings	Description
Full/Low Speed	All of USB Device operated on full/low speed mode
High Speed	If USB device was high speed device, then it operated on high speed mode.

USB Keyboard Function

Enable or disable Legacy support of USB Keyboard.
Settings: [Disabled, Enabled]

USB Mouse Function

Enable or disable Legacy support of USB Mouse.
Settings: [Disabled, Enabled]

USB Storage Function

Enable or disable Legacy support of USB Mass Storage.
Settings: [Disabled, Enabled]

FreeDOS Configuration

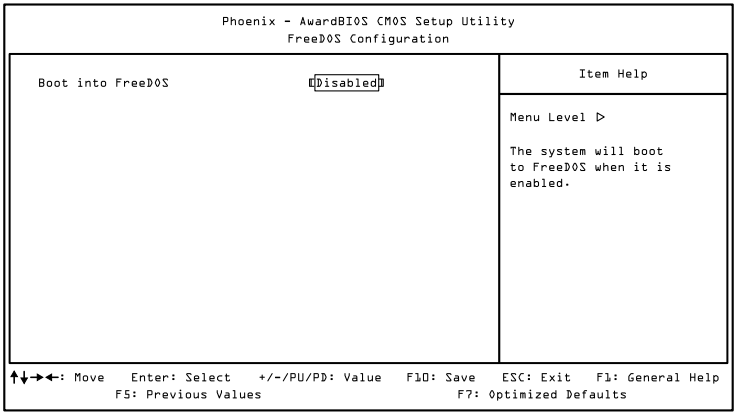

Boot into FreeDOS

The system will boot to FreeDOS.
Settings: [Disabled, Enabled]

POWER MANAGEMENT SETUP

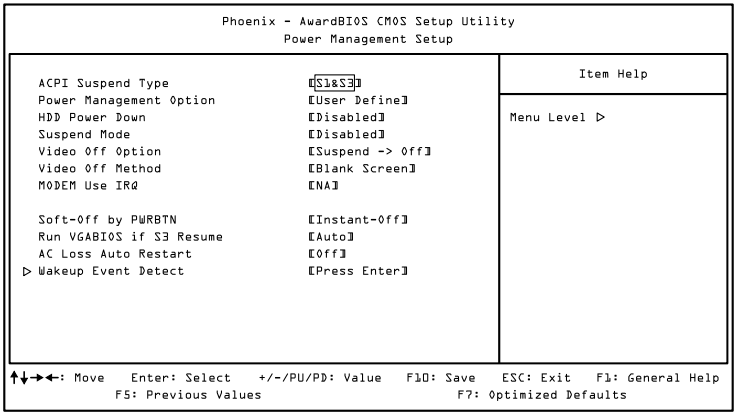

Includes submenus:
- Wakeup Event Detect

ACPI Suspend Type

Settings	Description
S1(POS)	S1/Power On Suspend (POS) is a low power state. In this state, no system context (CPU or chipset) is lost and hardware maintains all system contexts.
S3(STR)	S3/Suspend To RAM (STR) is a power-down state. In this state, power is supplied only to essential components such as main memory and wakeup-capable devices. The system context is saved to main memory, and context is restored from the memory when a "wakeup" event occurs.
S1 & S3	Depends on the OS to select S1 or S3.

Power Management Option

Settings: [User Define, Min Saving, Max Saving]

HDD Power Down

Set the length of time for a period of inactivity before powering down the hard disk.

Settings: [Disable, 1 Min, 2 Min, 3 Min, 4 Min, 5 Min, 6 Min, 7 Min, 8 Min, 9 Min, 10 Min, 11 Min, 12 Min, 13 Min, 14 Min, 15 Min]

Suspend Mode

Settings: [Disable, 1 Min, 2 Min, 4 Min, 6 Min, 8 Min, 10 Min, 20 Min, 30 Min, 40 Min, 1 Hour]

Video Off Option

Select whether or not to turn off the screen when system enters power saving mode, ACPI OS such as Windows XP will override this option.

Settings	Description
Always On	Screen is always on even when system enters power saving mode
Suspend -> Off	Screen is turned off when system enters power saving mode

Video Off Method

Settings: [Blank Screen, V/H SYNC + Blank, DPMS Support]

MODEM Use IRQ

Settings: [NA, 3, 4, 5, 7, 9, 10, 11]

Soft-Off by PWRBTN

Settings	Description
Delay 4 Sec	System is turned off if power button is pressed for more than four seconds.
Instant-Off	Power button functions as a normal power-on/-off button.

Run VGABIOS if S3 Resume

Select whether to run VGA BIOS if resuming from S3 state. This is only necessary for older VGA drivers.
Settings: [Auto, Yes, No]

AC Loss Auto Restart

The field defines how the system will respond after an AC power loss during system operation.

Settings	Description
Off	Keeps the system in an off state until the power button is pressed
On	Restarts the system when the power is back
Former-Sts	Former-Sts

WAKEUP EVENT DETECT

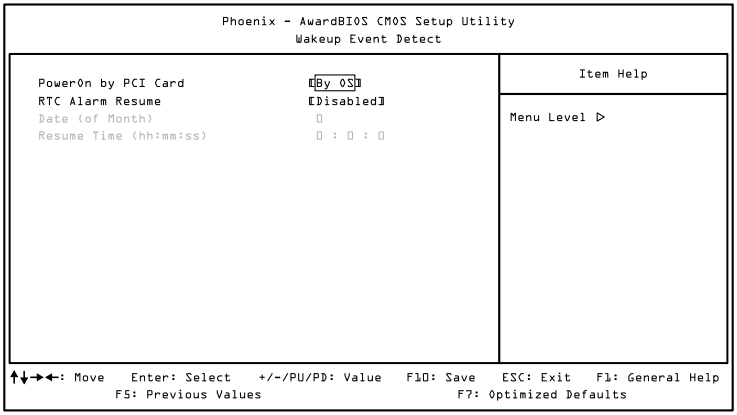

PowerOn by PCI Card

Enables activity detected from any PCI card to power up the system or resume from a suspended state. Such PCI cards include LAN, onboard USB ports, etc.
Settings: [By OS, Enabled]

RTC Alarm Resume

Set a scheduled time and/or date to automatically power on the system.
Settings: [Disabled, Enabled]

Date (of Month)

This field can only be set if "RTC Alarm Resume" is enabled. The field specifies the date for "RTC Alarm Resume".

Resume Time (hh:mm:ss)

This field can only be set if "RTC Alarm Resume" is enabled. The field specifies the time for "RTC Alarm Resume".

PNP/PCI CONFIGURATIONS

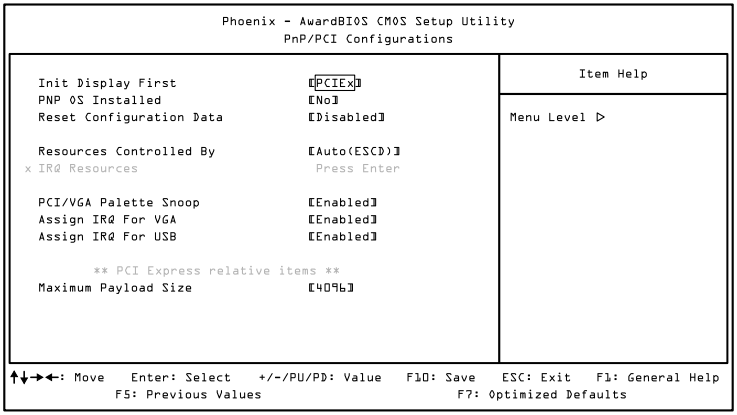

Note:
This section covers some very technical items and it is strongly recommended to leave the default settings as is unless you are an experienced user.

Init Display First

Settings: [Onboard, PCIEx]

PNP OS Installed

Settings	Description
No	BIOS will initialize all the PnP cards
Yes	BIOS will only initialize the PnP cards used for booting (VGA, IDE, SCSI). The rest of the cards will be initialized by the PnP operating system

Reset Configuration Data

Settings	Description
Disabled	Default setting
Enabled	Resets the ESCD (Extended System Configuration Data) after exiting BIOS Setup if a newly installed PCI card or the system configuration prevents the operating system from loading

Resources Controlled By

Enables the BIOS to automatically configure all the Plug-and-Play compatible devices.

Settings	Description
Auto(ESCD)	BIOS will automatically assign IRQ, DMA and memory base address fields
Manual	Unlocks "IRQ Resources" for manual configuration

PCI/VGA Palette Snoop

Settings: [Disabled, Enabled]

Assign IRQ for VGA

Assign IRQ for VGA devices.

Settings: [Disabled, Enabled]

Assign IRQ for USB

Assign IRQ for USB devices.

Settings: [Disabled, Enabled]

Maximum Payload Size

This option sets the maximum TLP payload size in bytes for PCI Express devices.
Settings: [128, 256, 512, 1024, 2048, 4096]

IRQ RESOURCES

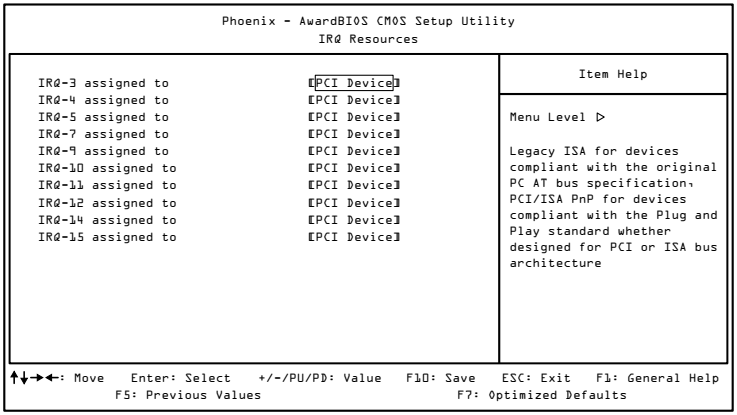

IRQ Resources list IRQ 3/4/5/7/9/10/11/12/14/15 for users to set each IRQ a type depending on the type of device using the IRQ. Settings:

PCI Device	For Plug-and-Play compatible devices designed for PCI bus architecture
Reserved	The IRQ will be reserved for further requests

PC HEALTH STATUS

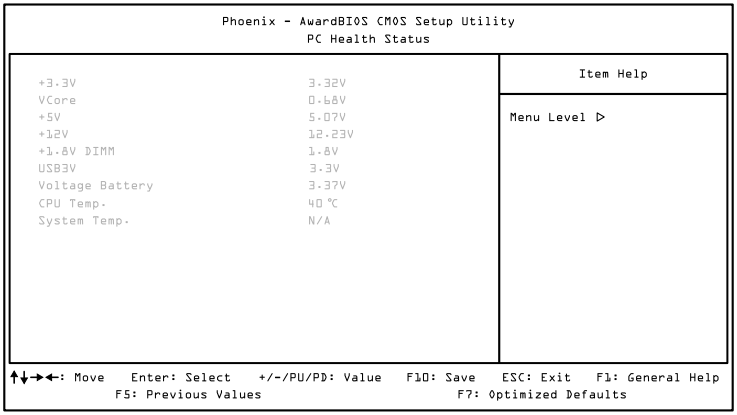

The PC Health Status displays the current status of all of the monitored hardware devices/components such as CPU voltages, temperatures and fan speeds.

FREQUENCY/VOLTAGE CONTROL

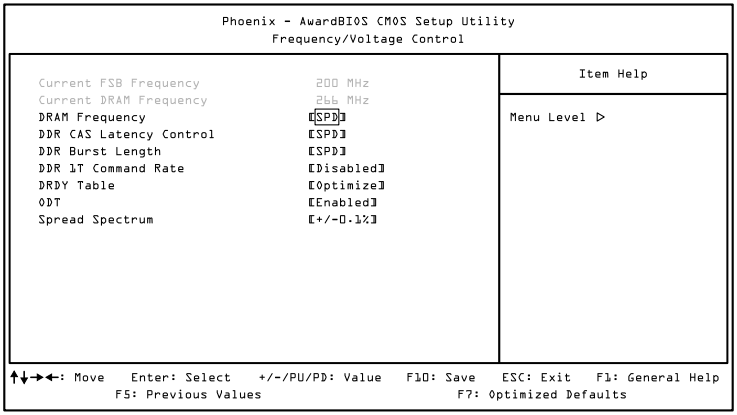

DRAM Frequency

Settings: [DDR2-400, DDR2-533, DDR2-667, SPD]

DDR CAS Latency Control

Settings: [2T, 3T, 4T, 5T, 6T, SPD]

DDR Burst Length

Settings: [4, 8, SPD]

DDR 1T Command Rate

Settings: [Disabled, Enabled]

DRDY Table

Settings: [Slowest, Optimize]

ODT

Settings: [Disabled, Enabled]

Spread Spectrum

When the mainboard's clock generator pulses, the extreme values (spikes) of the pulses create EMI (Electromagnetic Interference). The Spread Spectrum function reduces the EMI generated by modulating the pulses so that the spikes of the pulses are reduced to flatter curves.

Settings: [Disabled, +/- 0.1%, +/- 0.2%, +/- 0.3%, +/- 0.4%, +/- 0.5%, +/- 0.6%, +/- 0.7%, +/- 0.8%, +/- 0.9%]

LOAD OPTIMIZED DEFAULTS

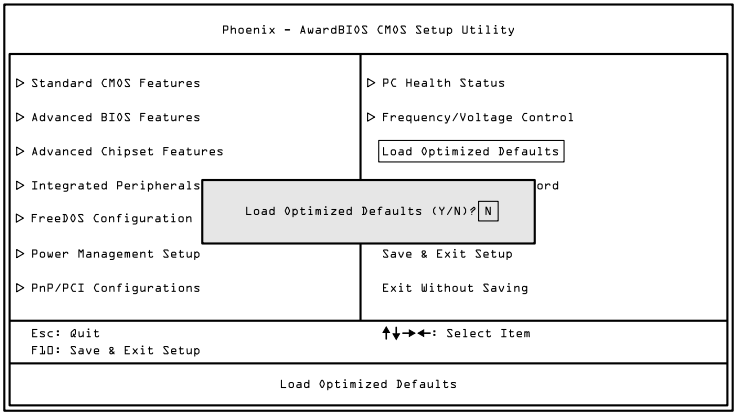

This option is for restoring all the default optimized BIOS settings. The default optimized values are set by the mainboard manufacturer to provide a stable system with optimized performance.

Entering "Y" and press <Enter> to load the default optimized BIOS values. Entering "N" will cancel the load optimized defaults request.

SET SUPERVISOR/USER PASSWORD

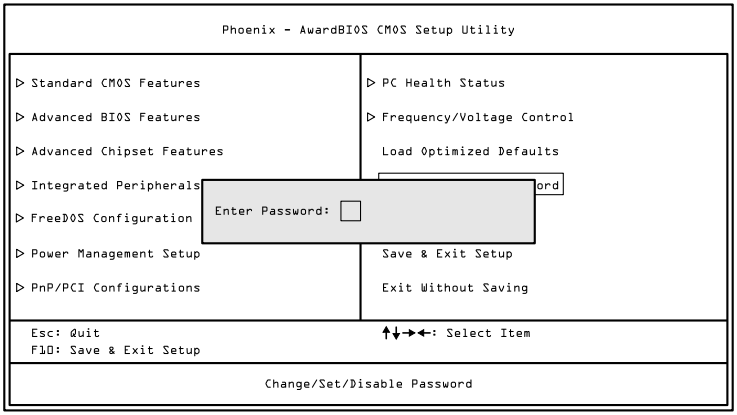

This option is for setting a password for entering BIOS Setup. When a password has been set, a password prompt will be displayed whenever BIOS Setup is run. This prevents an unauthorized person from changing any part of your system configuration.

There are two types of passwords you can set. A supervisor password and a user password. When a supervisor password is used, the BIOS Setup program can be accessed and the BIOS settings can be changed. When a user password is used, the BIOS Setup program can be accessed but the BIOS settings cannot be changed.

To set the password, type the password (up to eight characters in length) and press Enter. The password typed now will clear any previously set password from CMOS memory. The new password will need to be reentered to be confirmed. To cancel the process press Esc.

To disable the password, press Enter when prompted to enter a new password. A message will show up to confirm disabling the password. To cancel the process press Esc.

Additionally, when a password is enabled, the BIOS can be set to request the password each time the system is booted. This would prevent unauthorized use of the system. See "Security Option" in the "Advanced BIOS Features" section for more details.

SAVE & EXIT SETUP

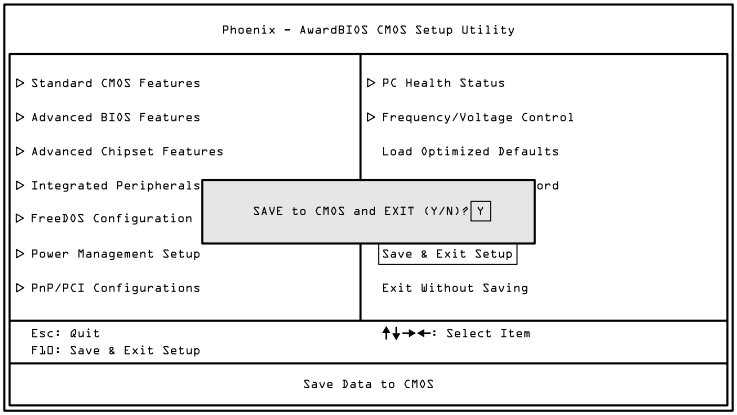

Entering "Y" saves any changes made, and exits the program.

Entering "N" will cancel the exit request.

EXIT WITHOUT SAVING

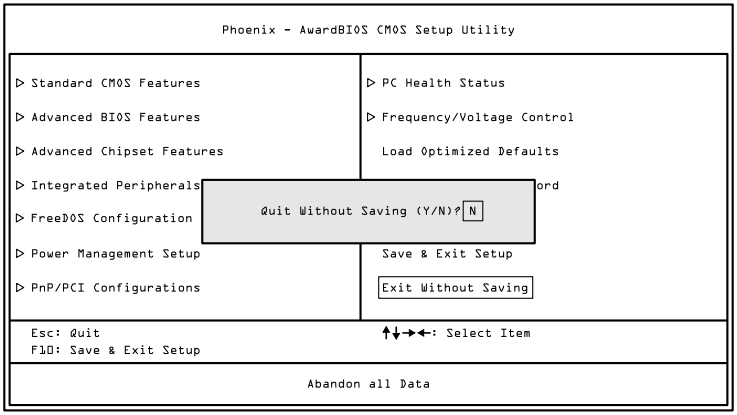

Entering "Y" discards any changes made, and exits the program.

Entering "N" will cancel the exit request.

6

Driver Installation

Microsoft Driver Support

The VIA ART-5450 is compatible with Microsoft operating systems. The latest Windows drivers can be downloaded from the VIA Embedded website at www.viaembedded.com.

For embedded operating systems, the related drivers can be found in the VIA Embedded website at www.viaembedded.com.

Linux Driver Support

The VIA ART-5450 is highly compatible with many Linux distributions.

Support and drivers are provided through various methods including:

1. Drivers provided by VIA
2. Using a driver built into a distribution package
3. Visiting www.viaembedded.com for the latest updated drivers
4. Installing a third party driver (such as the ALSA driver from the Advanced Linux Sound Architecture project for integrated audio)

For OEM clients and system integrators developing a product for long term production, other code and resources may also be made available. Contact VIA Embedded to submit a request.

Taiwan Headquarters
1F, 531 Zhong-zheng Road,
Xindian District, New Taipei City 231,
Taiwan

TEL: 886.2.2218.5452
FAX: 886.2.2218.5453
Email: embedded@via.com.tw

USA
940 Mission Court
Fremont, CA 94539
USA

TEL: 1.510.683.3300
FAX: 1.510.687.4654
Email: embedded@viatech.com

Europe
In den Dauen 6
53117 Bonn
Germany

TEL: 49.228.688565.0
FAX: 49.228.688565.19
Email: embedded@via-tech.de

China
Tsinghua Science Park Bldg. 7
No. 1 Zongguancun East Road
Haiden District, Beijing 100084

TEL: 86.10.59852288
FAX: 86.10.59852299
Email: embedded@viatech.com.cn

Japan
3-15-7 Ebisu MT Bldg. 6F
Higashi, Shibuya-ku
Tokyo 150-0011

TEL: 81.3.5466.1637
FAX: 81.3.5466.1638
Email: embedded@viatech.co.jp

Korea
2F, Sangjin Bldg., 417
Dogok-Dong, Gangnam-Gu
Seoul 135-854

TEL: 82.2.571.2986
FAX: 82.2.571.2987
Email: embedded@via-korea.com