SOM Modules

VIA
SOM-9X35

Fanless low-power platform for AIoT applications with quad-core MediaTek Genio 350 processor

Features

- High-performance quad-core MediaTek Genio 350 processor
- Integrated AI processor for AIoT applications
- Dual-band 802.11ac Wi-Fi with Bluetooth 5.0
- Dual display support
- Dual camera support

Board Placement

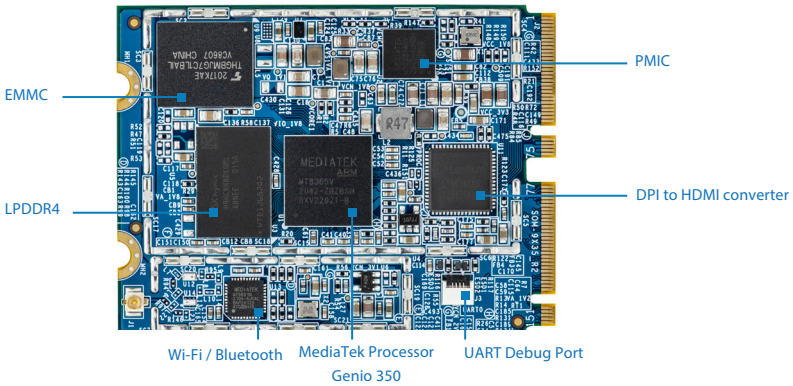

Specifications

Model Name	SOM-9X35
Processor	2.0GHz MediaTek Genio 350 Cortex-A53 quad-core SoC
System Memory	2GB LPDDR4 SDRAM (1GB/4GB optional)
Storage	16GB eMMC Flash Memory
Graphics	ARM Mali-G52 3EE MC1 GPU 3D graphic accelerator capable of processing 1600M pixel/sec @ 800MHz Graphics engine supporting OpenGL® ES 3.2, OpenCL ES 2.0, and Vulkan 1.1 hardware acceleration Supports H.265 and H.264 video decoding up to 1080p@60fps Supports Cadence Tensilica Vision P6 and HiFi4
Wireless Connectivity	MediaTek MT6631 Dual band (2.4GHz & 5GHz) single stream Wi-Fi 802.11 a/b/g/n/ac RF Bluetooth 5.0
PMIC/Audio Codec	MediaTek MT6357/MT6390
HDMI	Lontium LT8618SXB Digital Parallel Interface to HDMI 1.4 transmitter
Supported I/O through Golden Finger	1 4-Lane MIPI DSI 2 4-Lane MIPI CSI 1 HDMI 1.4 1 USB 2.0 Host 1 USB 2.0 OTG 1 SPI 3 I2C 2 UAR 2 MIC-in 1 Line-out 1 ADC 1 SDIO3.0 6 GPIO 2 PWM 1 Battery Gas Gauge 1 3.4~4.2V DC-in
Onboard I/O	1 RF I-PEX (for RF antenna for Wi-Fi and Bluetooth) 1 Debug UART (for USB to UART debug board)
Operating System	Android 10, Yocto 3.1
Operating Temperature	-40°C ~ 85°C (Under VIA's specific test environment)
Operating Humidity	0% ~ 95% (relative humidity ; non-condensing)
PCBA Form Factor	60mm x45mm
Top heat spreader size	50mm x 32mm
Bottom heat spreader size	48mm x 43mm
Dimensions (with two-side heat spreader)	60mm x 45mm x 6.8mm (W x D x H)

VAB-935 Carrier Board Front Panel I/O

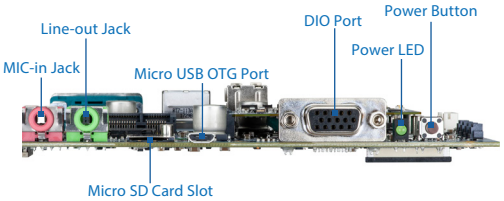

VAB-935 Carrier Board Back Panel I/O

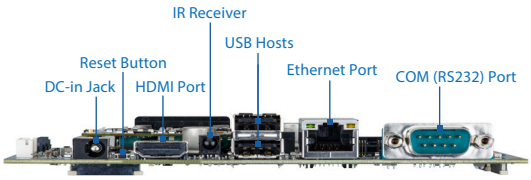

VAB-935 Carrier Board

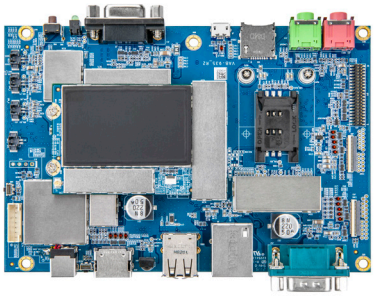

Specifications

Model Name	VAB-935 Carrier Board
USB	Genesys GL852GT-MNG USB 2.0 MTT HUB
LAN	Realtek RTL8152BNI-VB-CG USB 2.0 to 10/100M Ethernet controller
Onboard I/O	2 4-lane MIPI CSI connectors 1 4-lane MIPI DSI connector 1 LVDS connector (by ODM request) 1 7"capacitive touch panel connector 1 10.1" touch screen interface (by ODM request) 1 RTC battery connector 1 Battery charger connector 1 miniPCIe slot for 4G with GNSS 1 SIM card slot 1 Download button 1 MIC connector 2 Speaker connectors 1 MCU upgrade connector 1 I/O expansion connector (supports GPIO x 5 from SOM-Module and GPIO x 9, I2C x1, SPI x1, PWM x2, ADC x1 from Expander IC) 2 M.2 connectors for VIA SOM-9X35 module
Front Panel I/O	1 Micro USB 2.0 OTG port 1 DIO port supporting 10 GPIO with 3.3V power 1 Micro SD card slot 2 Audio jacks : Line-out and MIC-in 1 Power LED 1 Power button
Rear I/O	1 HDMI port 2 USB 2.0 ports 1 COM port for RS232 (TX/RX) 1 10/100Mbps Ethernet port 1 DC-in jack 1 Reset Button 1 IR Receiver
Power Supply	12V DC-in (support 9V~15V) 2-cell 8.4V Lion battery (optional)
Operation System	Android 10, Yocto 3.1
Operating Temperature	-40°C ~ 85°C (Under VIA's specific test environment)
Operating Humidity	0% ~ 95% (relative humidity ; non-condensing)
Form Factor	3.5" SBC, 146mm x 102mm

Ordering Information

Part Number	SoC Frequency	Description
10GPE20G00020	MediaTek Genio 350 quad-core Processor @ 2.0GHz	VIA SOM-9X35 module with 2.0GHz MediaTek Genio 350 quad-core Processor, 16GB eMMC, 2GB LPDDR4 SDRAM, Wi-Fi 5 (2.4GHz max. 20dBm/5GHz max. 17dBm) + Bluetooth 5.0
10GPD20G100A0	MediaTek Genio 350 quad-core Processor @ 2.0GHz	VIA SOM-9X35 module with 2.0GHz MediaTek Genio 350 Cortex-A53 quad-core SoC, 16GB eMMC, 2GB LPDDR4 SDRAM, Wi-Fi 5 (2.4GHz max. 20dBm/5GHz max. 17dBm) + Bluetooth 5.0 and VIA VAB-935-V2 3.5" carrier board with HDMI, 2 USB 2.0, Micro USB 2.0 OTG , CSI, DSI, DIO, Micro SD, Line-out, MIC-in, COM (TX/RX), 10/100Mbps Ethernet, miniPCIe, SIM card slot, 12V DC-in
STK-SOM935-00A0		VIA SOM-9X35 starter kit for international regions with VIA SOM-9X35 module, VIA VAB-935 carrier board + accessory kit
ACK-SOM935-00A0		VIA SOM-9X35 accessory kit for Japan (incl. PSE-certified power adapter)
99G40-07293A1		South Wireless EC25JFA-MINIPCIE 4G LTE mobile broadband full-sized miniPCIe module (Japan only)

Block Diagram

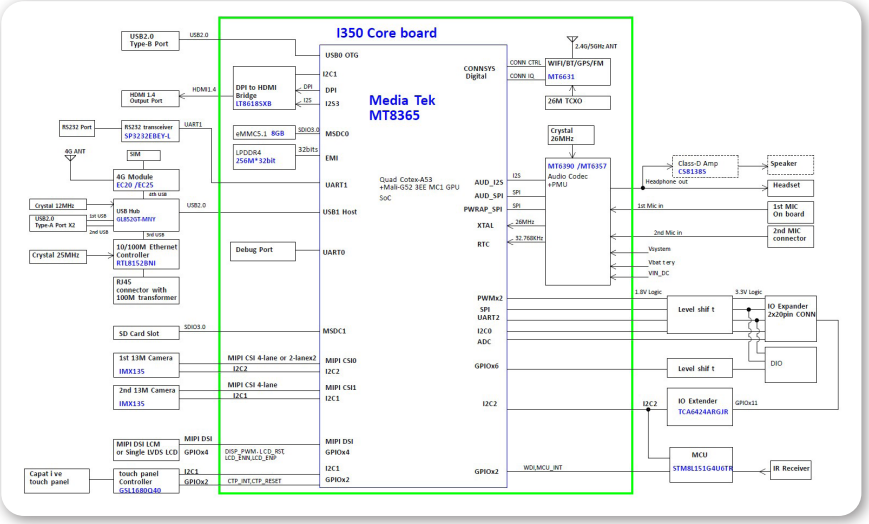

Accessory Kit Packing List

Items
7" 1024x600 MIPI LCD + touch panel display
2.4G/5G Wi-Fi antenna
200mm 4PIN/0.5mm FFC cable
12V 3A AC Adapter
13MP CMOS sensor camera module
2W Speakers x 2
Microphone
3V, 240mAh RTC battery
USB to UART debug board
M3*10mm bolts x 5
M3*20mm bolts x 5
M2*4mm screws x 2 for SOM Module